Panasonic®

PROGRAMMABLE DISPLAY

GT series

User's Manual

ARCT1F511E-6

2013.11 | panasonic.net/id/pidsx/global

Safety Precautions

Observe the following notices to ensure personal safety or to prevent accidents.
To ensure that you use this product correctly, read this User's Manual thoroughly before use.
Make sure that you fully understand the product and information on safety.
This manual uses two safety flags to indicate different levels of danger.

WARNING

If critical situations that could lead to user's death or serious injury is assumed by mishandling of the product:

- Always take precautions to ensure the overall safety of your system, so that the whole system remains safe in the event of failure of this product or other external factor.
- DO NOT USE THE PROGRAMMABLE DISPLAY TO CONTROL SAFETY FEATURES OR OTHER CRITICAL OPERATIONS OF EQUIPMENT OR SYSTEMS. A COMMUNICATION ERROR (FOR ANY REASON) MIGHT PREVENT SUCH SAFETY FEATURES OR CRITICAL OPERATIONS FROM FUNCTIONING PROPERLY.
- Do not use this product in areas with inflammable gas. It could lead to an explosion.
- Exposing this product to excessive heat or open flames could cause damage to the lithium battery or other electronic parts.
- Battery may explode if mistreated. Do not recharge, disassemble or dispose of fire.

CAUTION

If critical situations that could lead to user's injury or only property damage is assumed by mishandling of the product.

- To prevent excessive exothermic heat or smoke generation, use this product at the values less than the maximum of the characteristics and performance that are assured in these specifications.
- Do not dismantle or remodel the product. It could cause excessive exothermic heat or smoke generation.
- Do not touch the terminal while turning on electricity. It could lead to an electric shock.
- Use the external devices to function the emergency stop and interlock circuit.
- Connect the wires or connectors securely.
  The loose connection could cause excessive exothermic heat or smoke generation.
- Do not allow foreign matters such as liquid, flammable materials, metals to go into the inside of the product. It could cause excessive exothermic heat or smoke generation.
- Do not undertake construction (such as connection and disconnection) while the power supply is on. It could lead to an electric shock.
- The control force of the touch switches should be less than the specification of the product. Failure to do so could lead to a damage to the product or a personal injury.
- These touch switches operate using analog resistance membrane. Do not press more than one point on the screen at a time. Doing so might operate a switch located in the middle of the points pressed if one exists, and could lead to a damage to the facility or an accident.

Copyright / Trademarks

- This manual and its contents are copyrighted.
- You may not copy this manual in whole or part, without written consent of Panasonic Industrial Devices SUNX Co., Ltd.
- Windows is a registered trademark of Microsoft Corporation in the United States and other countries.
- Ethernet is a registered trademark of Fuji Xerox Co., Ltd. and Xerox Corp.
- SDHC logo and SD logo are trademarks.
- All other company names and product names are trademarks or registered trademarks of their respective owners.

Table of Contents

Before You Start
Manual to be Used
Available Functions and GT Versions

Chapter 1 Features and Functions 1-1

1.1 Features and Functions of GT Series 1-2

1.2 Types of Units 1-7
1.2.1 GT Series 1-7
1.2.2 Options and Repair Parts 1-9

1.3 Screen Creation Tool 1-12
1.3.1 Tools Required for Screen Creation 1-12
1.3.2 Software Usage Environment and Applicable Cables 1-12

Chapter 2 Names and Functions of Parts 2-1

2.1 Part Names 2-2
2.1.1 GT01, GT11 and GT21 2-2
2.1.2 GT02/GT02L 2-4
2.1.3 GT03-E 2-6
2.1.4 GT05/GT12/GT32 2-8

2.2 Terminal Layouts of COM Port 2-11
2.2.1 GT01 2-11
2.2.2 GT02 2-12
2.2.3 GT02L 2-13
2.2.4 GT11/GT12 2-14
2.2.5 GT03-E/GT21 2-15
2.2.6 GT05/GT32/GT32-E 2-16

2.3 Connecting to Screen Creation Tool GTWIN 2-17
2.3.1 TOOL Port 2-17
2.3.2 USB Port 2-17
2.3.3 Ethernet Port 2-18

Chapter 3 Installation and Wiring 3-1

3.1 Installation 3-2
3.1.1 Installation Environment 3-2
3.1.2 Restriction According to Mounting Directions 3-4
3.1.3 Installation Space 3-4
3.1.4 UL/c-UL Qualification 3-4
3.1.5 Mounting Screws 3-5
3.1.6 GT01 and GT11 Installation Method 3-6
3.1.7 GT21 Installation Method 3-6

3.1.8 GT05/GT32/GT32-E Installation Method 3-7
3.1.9 GT02/GT02L/GT03-E/GT12 Installation Method 3-8
3.1.10 Installing in Vertical Orientation 3-9
3.1.11 Precaution When reinstalling GT 3-9

3.2 Wiring the Power Supply 3-10
3.2.1 Wiring the Power supply 3-10
3.2.2 Grounding 3-11

3.3 Wiring the COM Port 3-12

3.4 Precautions when Wiring COM Port 3-14
3.4.1 GT01 (5 V DC) 3-14
3.4.2 GT02/GT02L (5 V DC) 3-15
3.4.3 RS232C Communication 3-16
3.4.4 RS422 (RS485) Communication 3-17

3.5 Precautions when Wiring Ethernet Port (GT32T1) 3-18

3.6 Options 3-19
3.6.1 Backup Battery 3-19
3.6.2 How to Install the Battery (Lithium Button Battery) 3-20
3.6.3 How to Install the Battery (Backup Battery) 3-20
3.6.4 Dead Battery Mark 3-21
3.6.5 Time for Replacement of Battery 3-21
3.6.6 Replacement of Front Panel Protective Sheet 3-21
3.6.7 About the Waterproof Packing 3-22

Chapter 4 Connecting with PLC 4-1

4.1 Connection with PLC 4-2
4.1.1 PLC Multiple Connection 4-2
4.1.2 GT Link Connection 4-2
4.1.3 Connecting to the PLCs made by Other Companies 4-3
4.1.4 Connecting to a Serial Device 4-3
4.1.5 Electric Supply from PLC (5 V DC-type) 4-3

4.2 RS232C Connection 4-4
4.2.1 Difference of Terminal blocks Between GT Models 4-4
4.2.2 RS232C Connection with PLC Tool Port 4-5
4.2.3 RS232C Connection with FP-X COM Port 4-7
4.2.4 RS232C Connection with FPΣ COM Port 4-9
4.2.5 RS232C Connection with FP0/FP0R COM Port 4-11
4.2.6 RS232C Connection with FP-e COM Port 4-12
4.2.7 RS232C Connection with FP2/FP2SH COM Port 4-13

4.3 RS422 Connection 4-14
4.3.1 Difference of Terminal blocks Between GT Models 4-14
4.3.2 RS422 Connection with FP-X COM Port 4-15
4.3.3 RS422 Connection with FP2/FP2SH COM Port 4-15
4.3.4 RS422 Connection with C-NET Adapter 4-17

4.4 RS485 Connection **4-18**
4.4.1 Difference of Terminal blocks Between GT Models 4-18
4.4.2 RS485 Connection with FP0R COM Port 4-19
4.4.3 RS485 Connection with FP-X COM Port 4-20
4.4.4 RS485 Connection with FPΣ COM Port 4-23
4.4.5 RS485 Connection with FP-e COM Port 4-25
4.4.6 RS485Connection with FP2/FP2SH 4-26
4.4.7 Precautions When Communicating With RS485 4-27

4.5 Connection With a PLC **4-28**
4.5.1 Automatic Communication Settings Function 4-28
4.5.2 Through Function 4-29
4.5.3 How to Make Communication Settings Using the FPWIN GR 4-31

Chapter 5 Troubleshooting **5-1**

5.1 What to DO If Something Unusual Occurs (GT01/GT11/ GT21) **5-2**

5.2 What to DO If Something Unusual Occurs (GT02/GT02L/GT03-E/GT05/GT12/GT32/GT32-E) **5-5**

5.3 Error Codes and How to Handle Them **5-10**
5.3.1 About Error Codes 5-10
5.3.2 GT Series Error Codes 5-10
5.3.3 When Connected to a FP Series PLC 5-14
5.3.4 When Connected to a PLC (FX Series) Made by Mitsubishi Electric Corporation 5-16
5.3.5 When Connected to a PLC Made by Omron Corporation 5-17
5.3.6 When Connected to Modbus 5-18
5.3.7 When Connected to a PLC Made by Toshiba Machine Co., Ltd. 5-18
5.3.8 When Performing General-purpose Serial Communication 5-19

Chapter Specifications **6-1**

6.1 GT01 ..... **6-2**
6.1.1 General Specifications 6-2
6.1.2 Performance Specifications (GT01) 6-3
6.1.3 Function Specifications (GT01) 6-4
6.1.4 Interface Specifications (GT01) 6-5

6.2 GT02 ..... **6-6**
6.2.1 General Specifications (GT02) 6-6
6.2.2 Performance Specifications (GT02) 6-7
6.2.3 Function Specifications (GT02) 6-8
6.2.4 Interface Specifications (GT02) 6-9

6.3 GT02L **6-10**
6.3.1 General Specifications (GT02L) 6-10
6.3.2 Performance Specifications (GT02L) 6-11
6.3.3 Function Specifications (GT02L) 6-12
6.3.4 Interface Specifications (GT02L) 6-13

6.4 GT03-E **6-14**
6.4.1 General Specifications (GT03-E) 6-14
6.4.2 Performance Specifications (GT03-E) 6-15
6.4.3 Function Specifications (GT03-E) 6-16
6.4.4 Interface Specifications (GT03-E) 6-17

6.5 GT05 ..... **6-18**
6.5.1 General Specifications 6-18
6.5.2 Performance Specifications (GT05) 6-19
6.5.3 Function Specifications (GT05) 6-20
6.5.4 Interface Specifications (GT05) 6-21

6.6 GT11 ..... **6-22**
6.6.1 General Specifications (GT11) 6-22
6.6.2 Performance Specifications (GT11) 6-23
6.6.3 Function Specifications (GT11) 6-24
6.6.4 Interface Specifications (GT11) 6-25

6.7 GT12 ..... **6-26**
6.7.1 General Specifications (GT12) 6-26
6.7.2 Performance Specifications (GT12) 6-27
6.7.3 Function Specifications (GT12) 6-28
6.7.4 Interface Specifications (GT12) 6-29

6.8 GT21 ..... **6-30**
6.8.1 General Specifications (GT21) 6-30
6.8.2 Performance Specifications (GT21) 6-31
6.8.3 Function Specifications (GT21) 6-32
6.8.4 Interface Specifications (GT21) 6-33

6.9 GT32 ..... **6-34**
6.9.1 General Specifications (GT32) 6-34
6.9.2 Performance Specifications (GT32) 6-35
6.9.3 Function Specifications (GT32) 6-36
6.9.4 Interface Specifications (GT32) 6-37
6.9.5 Sound Output Specifications (GT32T1 Only) 6-38

6.10 GT32-E **6-39**
6.10.1 General Specifications (GT32-E) 6-39
6.10.2 Performance Specifications (GT32-E) 6-40
6.10.3 Function Specifications (GT32-E) 6-41
6.10.4 Interface Specifications (GT32-E) 6-42

Chapter 7 Dimensions and Other Documentation 7-1

7.1 Dimensions **7-2**
7.1.1 GT01/GT01R 7-2
7.1.2 GT02 7-3
7.1.3 GT02L 7-4
7.1.4 GT03M-E 7-5
7.1.5 GT03T-E 7-6
7.1.6 GT05 7-7

7.1.7 GT11 7-8
7.1.8 GT12 7-9
7.1.9 GT21 7-10
7.1.10 GT32 7-11
7.1.11 GT32-E 7-12

7.2 Cable Specifications 7-13
7.2.1 AIGT8142 7-13
7.2.2 AIGT8152 7-13
7.2.3 AIGT8162/AIGT8165/AIGT8160 7-13
7.2.4 AIGT8175 7-14
7.2.5 AIP81842 7-14

7.3 BIN/HEX/BCD Code Correspondence Table 7-15

7.4 ASCII Code Table 7-16

Record of changes

Before You Start

Usage conditions

Operating environment (Use the unit within the range of the general specifications when installing)

- Ambient temperatures: 0 to +50 °C
  (It varies according to models when installing the unit in a horizontal orientation or using a C-NET adapter and FP programmer II.)
- Ambient humidity should be 20 to 85% RH (at 25 °C) and non-condensing.
- Usable altitude: Altitude 2,000 m or less
- For use in pollution Degree 2 environment
- Do not use it in the following environments.
  - Direct sunlight, wind and rain. (This product is not designed for outdoor use.)
  - Sudden temperature changes causing condensation.
  - Inflammable or corrosive gas.
  - Excessive airborne dust, metal particles or saline matter.
  - Benzine, paint thinner, alcohol or other organic solvents or strong alkaline solutions such as ammonia or caustic soda.
  - Direct vibration, shock or places always exposed to drop of water.
    (This unit is warranted by IP65/IP67 (depending on models) for panel mounting, however, this applies to initial values.)
  - Influence from power transmission lines, high voltage equipment, power cables, power equipment, radio transmitters, or any other equipment that would generate high switching surges. (100 mm or more)

The usage conditions for Tough series (GT03-E/GT32-E) are as follows.

- Ambient temperatures: -20 to +60 °C (In horizontal orientation, when sitting upright in vertical orientation or when using a battery: -20 to +55 °C)
- Ambient humidity should be 10 to 90% RH (at 25 °C) and non-condensing.
  - The upper limit of the humidity at each temperature is as below.
    (Below 40 °C; 90%RH, 50 °C; 55%RH, 60 °C; 35%RH)
  - If the product is exposed to heavy rain, condensation might be caused by sudden temperature changes.
- Usable altitude: Altitude 2,000 m or less
- For use in pollution Degree 2 environment
- Overvoltage category: II
- Do not use it in the following environments.
  - Direct sunlight for a long time
    (Exposing the product to direct sunlight increases the surface temperature of the display higher than ambient temperature, and causes deterioration of LDC panel.)
  - Inflammable or corrosive gas.
  - Excessive airborne dust, metal particles or saline matter.
  - Benzine, paint thinner, alcohol or other organic solvents or strong alkaline solutions such as ammonia or caustic soda.
  - Direct vibration, shock or places always exposed to drop of water.
    (This unit is warranted by IP67 for panel mounting, however, this applies to initial values.)
  - Influence from power transmission lines, high voltage equipment, power cables, power equipment, radio transmitters, or any other equipment that would generate high switching surges. (100 mm or more)

Static electricity

- Do not touch connector pins directly to prevent static electricity from causing damage.
- Always rid yourself of any static electricity before handling this product.
- If excessive static electricity is applied to the panel surface, the LCD panel unit may be damaged.

Power supply

- Twist the wires of the power supply.
- The unit has sufficient noise immunity against the noise generated on the power line. However, it is recommended to take measures for reducing noise such as using an isolating transformer before supplying the power. And it is recommended to take measures such as installing a ferrite core.
- Allocate an independent wiring for each power supplying line, PLC etc and operating device.
- If using a power supply without a protective circuit, power should be supplied through a protective element such as fuse. Directly applying an abnormal voltage to the unit may cause the damage to the internal circuit.

Touch switches

- Always operate the touch switch with fingers. As the touch switch may be damaged due to the excessive load or shock (caused when being operated with any tools), the touch switch should be operated within the specified control force. Also, if the touch switch is pressed like kneading, the electrode may be worn out exceptionally, and cause the malfunction. Operate with a single touch of the switch.
- The touch position may shift due to aging variation. If the touch position has shifted, please adjust it.

LCD panel

- Do not drop or have a strong impact on the programmable display unit as glass is used for the LCD panel.
- The liquid in the LCD panel is a hazardous substance. If the LCD panel is broken, do not put the leaked crystalline liquid into your mouth. Should it get into your mouth, immediately gargle, and consult a doctor. If it adheres to your skin or clothes, wash it away with soap.
- On the LCD panel, bright spots (points always lit) or black spots (points always unlit) may appear, or the uneven brightness, flickers or crosstalk (appearance of unintended shades in the area no graphic or part is arranged) may occur depending on the operating conditions. Note that these phenomena are resulted from the basic characteristics of LCD panel not defects or failures of the product.

Battery

Do not leave the battery in the unit when it is not used. There is a possibility of leak if it is left being discharged.

Scratch protection sheet

A sheet is affixed to the touch panel to protect it from scratches when shipping. Please remove it before using the GT.

Manuals to be Used

- The manuals to be used for GT series are common to all the models.

GT series User's Manual ARCT1F511E
- It is this manual. This manual describes the characteristics, specifications, installation and connections of each GT models.

GT series Reference Manual ACGM0357VEN**
- This manual describes the screen creation of GT series and the settings of various functions.

General-purpose Serial Communication Manual ARCT1F356E
- It is required when communication is carried out with devices you developed such as a board and PC.

Connection with Other Companies' PLCs Manual ARCT1F449E
It is a manual describing the connection methods with PLCs manufactured by other companies. The connection methods with Panasonic PLCs are described in this manual.

Installation Guide ARCT1F513E
It is a manual describing how to install GTWIN. It supplied with the GTWIN software product.

Key Point: - The PDF versions are provided at our website.
http://industrial.panasonic.com/ac/e/dl_center/manual/
(User registration is required. Free of charge)

Available Functions and GT Versions

We recommend to keep GT-series products up to date for use as usable functions will increase according to the upgrade.

The latest version of GT can be installed by the tool.
The upgrade of GTWIN is also necessary according to the upgrade of GT.

Version of GT01 and available functions

Function			GT01	GTWIN
Parts library	Switch		1.00 or later	2.30 or later
	Lamp		1.00 or later	2.30 or later
	Message		1.00 or later	2.30 or later
	Data		1.00 or later	2.30 or later
	Bar graph		1.00 or later	2.30 or later
	Clock		1.00 or later Note1)	2.30 or later
	Line graph		1.00 or later	2.30 or later
	Alarm	History	Not available	Not available
		List	Not available	Not available
	Keyboard		1.00 or later	2.30 or later
	Custom		1.00 or later	2.30 or later
Other functions	Recipe	Recipe	1.00 or later	2.30 or later
		SD recipe	Not available	Not available
	Flow display		1.00 or later	2.30 or later
	Write device		1.00 or later	2.30 or later
	Sound		Not available	Not available
	Password	Password	1.00 or later	2.30 or later
		Operation security	Not available	Not available
	Multi language exchange		1.20 or later	2.50 or later
	Logging function		Not available	Not available
	Display panel sideways setting		1.10 or later	2.40 or later
	Copy	Cable between GTs	1.30 or later	-
		SD memory card	Not available	Not available
	GT link		Not available	Not available
	PLC multiple connection		Not available	Not available

Note1) Only referring to PLC can be set.

Version of GT02 and available functions

Function			GT02M2 GT02G2	GT02M0 GT02M1 GT02G0 GT02G1	GTWIN
Parts library	Switch		1.00 or later	1.00 or later	2.A0 or later
	Lamp		1.00 or later	1.00 or later	2.A0 or later
	Message		1.00 or later	1.00 or later	2.A0 or later
	Data		1.00 or later	1.00 or later	2.A0 or later
	Bar graph		1.00 or later	1.00 or later	2.A0 or later
	Clock		1.00 or later	1.00 or later Note1)	2.A0 or later
	Line graph		1.00 or later	1.00 or later	2.A0 or later
	Alarm	History	1.00 or later	Not available	2.A0 or later
		List	1.00 or later	1.00 or later	2.A0 or later
	Keyboard		1.00 or later	1.00 or later	1.00 or later
	Custom		1.00 or later	1.00 or later	1.00 or later
Other functions	Recipe	Recipe	1.00 or later	1.00 or later	2.A0 or later
		SD recipe	1.00 or later	Not available	2.A0 or later
	Flow display		1.00 or later	1.00 or later	2.A0 or later
	Write device		1.00 or later	1.00 or later	2.A0 or later
	Sound		Not available	Not available	Not available
	Password	Password	1.00 or later	1.00 or later	2.A0 or later
		Operation security	1.00 or later	1.00 or later	2.A0 or later
	Multi language exchange		1.00 or later	1.00 or later	2.A0 or later
	Logging function		1.00 or later	Not available	2.A0 or later
	FP monitor function		1.30 or later	1.30 or later	2.C0 or later
	Display panel sideways setting		1.00 or later	1.00 or later	2.A0 or later
	Copy	Cable between GTs	Not available	Not available	Not available
		SD memory card	1.00 or later	Not available	2.A0 or later
	GT link		1.00 or later	1.00 or later	2.A0 or later
	PLC multiple connection		1.00 or later	1.00 or later	2.A0 or later

Note1) Only referring to PLC can be set.

Version of GT02L and available functions

Function			GT02L	GTWIN
Parts library	Switch		1.00 or later	2.B0 or later
	Lamp		1.00 or later	2.B0 or later
	Message		1.00 or later	2.B0 or later
	Data		1.00 or later	2.B0 or later
	Bar graph		1.00 or later	2.B0 or later
	Clock		1.00 or later Note1)	2.B0 or later
	Line graph		1.00 or later	2.B0 or later
	Alarm	History	Not available	2.B0 or later
		List	1.00 or later	2.B0 or later
	Keyboard		1.00 or later	1.00 or later
	Custom		1.00 or later	1.00 or later
Other functions	Recipe	Recipe	1.00 or later	2.B0 or later
		SD recipe	Not available	2.B0 or later
	Flow display		1.00 or later	2.B0 or later
	Write device		1.00 or later	2.B0 or later
	Sound		Not available	Not available
	Password	Password	1.00 or later	2.B0 or later
		Operation security	1.00 or later	2.B0 or later
	Multi language exchange		1.00 or later	2.B0 or later
	Logging function		Not available	Not available
	FP monitor function		1.20 or later	2.C0 or later
	Display panel sideways setting		1.00 or later	2.B0 or later
	Copy	Cable between GTs	Not available	Not available
		SD memory card	Not available	Not available
	GT link		1.00 or later	2.B0 or later
	PLC multiple connection		1.00 or later	2.B0 or later

Note1) Only referring to PLC can be set.

Note:

The buzzer function is not available for GT02L. All the functions related to the buzzer are unsupported.

Version of GT03-E and available functions

Function			GT03M-E	GT03T-E	GTWIN
Parts library	Switch		1.00 or later	1.10 or later	2.E1 or later
	Lamp		1.00 or later	1.10 or later	2.E1 or later
	Message		1.00 or later	1.10 or later	2.E1 or later
	Data		1.00 or later	1.10 or later	2.E1 or later
	Bar graph		1.00 or later	1.10 or later	2.E1 or later
	Clock		1.00 or later Note1)	1.10 or later	2.E1 or later
	Line graph		1.00 or later	1.10 or later	2.E1 or later
	Alarm	History	Not available	1.10 or later	2.E1 or later
		List	1.00 or later	1.10 or later	2.E1 or later
	Keyboard		1.00 or later	1.10 or later	2.E1 or later
	Custom		1.00 or later	1.10 or later	2.E1 or later
Other functions	Recipe	Recipe	1.00 or later	1.10 or later	2.E1 or later
		SD recipe	Not available	1.10 or later	2.E1 or later
	Flow display		1.00 or later	1.10 or later	2.E1 or later
	Write device		1.00 or later	1.10 or later	2.E1 or later
	Sound		Not available	Not available	Not available
	Password	Password	1.00 or later	1.10 or later	2.E1 or later
		Operation security	1.00 or later	1.10 or later	2.E1 or later
	Multi language exchange		1.00 or later	1.10 or later	2.E1 or later
	Logging function		Not available	1.10 or later	2.E1 or later
	FP monitor function		1.00 or later	1.10 or later	2.E1 or later
	Display panel sideways setting		1.00 or later	1.10 or later	2.E1 or later
	Copy	Cable between GTs	Not available	Not available	Not available
		SD memory card	Not available	1.10 or later	2.E1 or later
	GT link		1.00 or later	1.10 or later	2.E1 or later
	PLC Multiple Connection		1.00 or later	1.10 or later	2.E1 or later

Note1) Only referring to PLC can be set.

Version of GT05 and available functions

Function			GT05	GTWIN
Parts library	Switch		1.00 or later	2.90 or later
	Lamp		1.00 or later	2.90 or later
	Message		1.00 or later	2.90 or later
	Data		1.00 or later	2.90 or later
	Bar graph		1.00 or later	2.90 or later
	Clock		1.00 or later	2.90 or later
	Line graph		1.00 or later	2.90 or later
	Alarm	History	1.00 or later	2.90 or later
		List	1.00 or later	2.90 or later
	Keyboard		1.00 or later	2.90 or later
	Custom		1.00 or later	2.90 or later
Other functions	Recipe	Recipe	1.00 or later	2.90 or later
		SD recipe	1.60 or later	2.A0 or later
	Flow display		1.00 or later	2.90 or later
	Write device		1.00 or later	2.90 or later
	Sound		Not available	Not available
	Password	Password	1.00 or later	2.90 or later
		Operation security	1.10 or later	2.94 or later
	Multi language exchange		1.00 or later	2.90 or later
	Logging function		1.40 or later	2.98 or later
	FP monitor function		1.90 or later	2.C0 or later
	Display panel sideways setting		2.00 or later	2.C1 or later
	Copy	Cable between GTs	Not available	Not available
		SD memory card	1.00 or later	2.90 or later
	GT link		1.10 or later	2.94 or later
	PLC Multiple Connection		1.30 or later	2.97 or later

Version of GT11 and available functions

Function			GT11	GTWIN
Parts library	Switch		1.00 or later	2.60 or later
	Lamp		1.00 or later	2.60 or later
	Message		1.00 or later	2.60 or later
	Data		1.00 or later	2.60 or later
	Bar graph		1.00 or later	2.60 or later
	Clock		1.00 or later Note1)	2.60 or later
	Line graph		1.00 or later	2.60 or later
	Alarm	History	1.00 or later	2.60 or later
		List	1.00 or later	2.60 or later
	Keyboard		1.00 or later	2.60 or later
	Custom		1.00 or later	2.60 or later
Other functions	Recipe	Recipe	1.00 or later	2.60 or later
		SD recipe	Not available	Not available
	Flow display		1.00 or later	2.60 or later
	Write device		1.00 or later	2.60 or later
	Sound		Not available	Not available
	Password	Password	1.00 or later	2.60 or later
		Operation security	Not available	Not available
	Multi language exchange		1.00 or later	2.60 or later
	Logging function		Not available	Not available
	Display panel sideways setting		1.00 or later	2.60 or later
	Copy	Cable between GTs	1.20 or later	-
		SD memory card	Not available	Not available
	GT link		Not available	Not available
	PLC multiple connection		Not available	Not available

Note1) Summer time cannot be set.

Version of GT12 and available functions

Function			GT12M1 GT12G1	GT12M0 GT12G0	GTWIN
Parts library	Switch		1.00 or later	1.00 or later	2.97 or later
	Lamp		1.00 or later	1.00 or later	2.97 or later
	Message		1.00 or later	1.00 or later	2.97 or later
	Data		1.00 or later	1.00 or later	2.97 or later
	Bar graph		1.00 or later	1.00 or later	2.97 or later
	Clock		1.00 or later	1.00 or later	2.97 or later
	Line graph		1.00 or later	1.00 or later	2.97 or later
	Alarm	History	1.00 or later	1.00 or later	2.97 or later
		List	1.00 or later	1.00 or later	2.97 or later
	Keyboard		1.00 or later	1.00 or later	2.97 or later
	Custom		1.00 or later	1.00 or later	2.97 or later
Other functions	Recipe	Recipe	1.00 or later	1.00 or later	2.97 or later
		SD recipe	1.20 or later	Not available	2.A0 or later
	Flow display		1.00 or later	1.00 or later	2.97 or later
	Write device		1.00 or later	1.00 or later	2.97 or later
	Sound		Not available	Not available	Not available
	Password	Password	1.00 or later	1.00 or later	2.97 or later
		Operation security	1.00 or later	1.00 or later	2.97 or later
	Multi language exchange		1.00 or later	1.00 or later	2.97 or later
	Logging function		1.10 or later	Not available	2.98 or later
	FP monitor function		1.60 or later	1.60 or later	2.C0 or later
	Display panel sideways setting		1.00 or later	1.00 or later	2.97 or later
	Copy	Cable between GTs	Not available	Not available	Not available
		SD memory card	1.00 or later	Not available	2.97 or later
	GT link		1.00 or later	1.00 or later	2.97 or later
	PLC multiple connection		1.00 or later	1.00 or later	2.97 or later

Version of GT21 and available functions

Function			GT21	GTWIN
Parts library	Switch		1.00 or later	2.70 or later
	Lamp		1.00 or later	2.70 or later
	Message		1.00 or later	2.70 or later
	Data		1.00 or later	2.70 or later
	Bar graph		1.00 or later	2.70 or later
	Clock		1.00 or later Note1)	2.70 or later
	Line graph		1.00 or later	2.70 or later
	Alarm	History	1.00 or later	2.70 or later
		List	1.00 or later	2.70 or later
	Keyboard		1.00 or later	2.70 or later
	Custom		1.00 or later	2.70 or later
Other functions	Recipe	Recipe	1.00 or later	2.70 or later
		SD recipe	Not available	Not available
	Flow display		1.00 or later	2.70 or later
	Write device		1.00 or later	2.70 or later
	Sound		Not available	Not available
	Password	Password	1.00 or later	2.70 or later
		Operation security	Not available	Not available
	Multi language exchange		1.00 or later	2.70 or later
	Logging function		Not available	Not available
	Display panel sideways setting		1.10 or later	2.71 or later
	Copy	Cable between GTs	1.10 or later	-
		SD memory card	Not available	Not available
	GT link		Not available	Not available
	PLC multiple connection		Not available	Not available

Note1) Summer time cannot be set.

Version of GT32 and available functions

Function			GT32M GT32T0	GT32T1	GTWIN
Parts library	Switch		1.00 or later	1.00 or later	2.80 or later
	Lamp		1.00 or later	1.00 or later	2.80 or later
	Message		1.00 or later	1.00 or later	2.80 or later
	Data		1.00 or later	1.00 or later	2.80 or later
	Bar graph		1.00 or later	1.00 or later	2.80 or later
	Clock		1.00 or later	1.00 or later	2.80 or later
	Line graph		1.00 or later	1.00 or later	2.80 or later
	Alarm	History	1.00 or later	1.00 or later	2.80 or later
		List	1.00 or later	1.00 or later	2.80 or later
	Keyboard		1.00 or later	1.00 or later	2.80 or later
	Custom		1.00 or later	1.00 or later	2.80 or later
Other functions	Recipe	Recipe	1.00 or later	1.00 or later	2.80 or later
		SD recipe	1.60 or later	1.60 or later	2.A0 or later
	Flow display		1.00 or later	1.00 or later	2.80 or later
	Write device		1.00 or later	1.00 or later	2.80 or later
	Sound		Not available	1.00 or later	2.80 or later
	Password	Password	1.00 or later	1.00 or later	2.80 or later
		Operation security	1.20 or later	1.20 or later	2.94 or later
	Multi language exchange		1.00 or later	1.00 or later	2.80 or later
	Logging function		1.50 or later	1.50 or later	2.98 or later
	FP monitor function		2.00 or later	2.00 or later	2.C0 or later
	Display panel sideways setting		2.10 or later	2.10 or later	2.C1 or later
	Copy	Cable between GTs	Not available	Not available	Not available
		SD memory card	1.00 or later	1.00 or later	2.80 or later
	GT link		1.20 or later	1.20 or later	2.94 or later
	PLC multiple connection		1.40 or later	1.40 or later	2.97 or later

Version of GT32-E and available functions

Function			GT32M-E	GT32T1-E	GTWIN
Parts library	Switch		1.00 or later	1.00 or later	2.C0 or later
	Lamp		1.00 or later	1.00 or later	2.C0 or later
	Message		1.00 or later	1.00 or later	2.C0 or later
	Data		1.00 or later	1.00 or later	2.C0 or later
	Bar graph		1.00 or later	1.00 or later	2.C0 or later
	Clock		1.00 or later	1.00 or later	2.C0 or later
	Line graph		1.00 or later	1.00 or later	2.C0 or later
	Alarm	History	1.00 or later	1.00 or later	2.C0 or later
		List	1.00 or later	1.00 or later	2.C0 or later
	Keyboard		1.00 or later	1.00 or later	2.C0 or later
	Custom		1.00 or later	1.00 or later	2.C0 or later
Other functions	Recipe	Recipe	1.00 or later	1.00 or later	2.C0 or later
		SD recipe	1.00 or later	1.60 or later	2.C0 or later
	Flow display		1.00 or later	1.00 or later	2.C0 or later
	Write device		1.00 or later	1.00 or later	2.C0 or later
	Sound		Not available	Not available	Not available
	Password	Password	1.00 or later	1.00 or later	2.C0 or later
		1.00 or later	1.00 or later	1.20 or later	2.C0 or later
	Multi language exchange		1.00 or later	1.00 or later	2.C0 or later
	Logging function		1.00 or later	1.00 or later	2.C0 or later
	FP monitor function		1.00 or later	1.00 or later	2.C0 or later
	Display panel sideways setting		1.10 or later	1.10 or later	2.C1 or later
	Copy	Cable between GTs	Not available	Not available	Not available
		1.00 or later	1.00 or later	1.00 or later	2.C0 or later
	GT link		1.00 or later	1.00 or later	2.C0 or later
	PLC multiple connection		1.00 or later	1.00 or later	2.C0 or later

Change history

GTWIN version	GT-series version	Additional functions
Ver. 2.80	GT32 Ver. 1.00 (New release)	- New model - Equipped a SD memory card slot. - Sound function
Ver. 2.90	GT05 Ver. 1.00 (New release)	- New model
Ver. 2.94	GT05 Ver. 1.10 GT32 Ver. 1.20	- Operation security function - GT link function
Ver. 2.96	GT01 Ver. 1.35 GT05 Ver. 1.20 GT11 Ver. 1.25 GT21 Ver. 1.15 GT32 Ver. 1.30	- Touch sound disable flag in Basic communication area (Bit area)
Ver. 2.97	GT05 Ver. 1.30 GT12 Ver. 1.00 (New release) GT32 Ver. 1.40	- New model - "Multi Function" function - PLC multiple connection - Display/Hide of data parts - Modbus slave function - Added 4096-color parts library.
	GT01 Ver.1.35 GT11 Ver.1.25 GT21 Ver.1.15	- Modbus slave function
Ver. 2.98	GT05 Ver. 1.40 GT12 Ver. 1.10 GT32 Ver. 1.50	- Logging function - Index modifier of data parts - Display/Hide of switch parts - Display of data parts in kana and Chinese character, - kana input of keyboard parts・Unit number setting on GT when using General-purpose serial - SD memory card copy to password-protected GT - Connection between multiple units with Modbus(RTU) master - Output to Panasonic FP series "X" device. - Jump to the previous screen from "Screen No. Error" screen - Reverse display function
	GT01 Ver. 1.37 GT11 Ver. 1.27	- Jump to the previous screen from "Screen No. Error" screen - Reverse display function
Ver.2.983	GT05 Ver.1.42 GT12 Ver.1.12 GT32 Ver.1.52	Bug fixing
Ver.2.99	GT05 Ver.1.50 GT12 Ver.1.20 GT32 Ver.1.60	- Functions for devices such as Temperature control device of MODBUS (RTU mode) - Display of data parts in Chinese and Korean - Graph display of logging device data for logging function - Bar graph of line graph parts - Fixed line of line graph parts - Supports SDHC memory card
	1. -	- Display/Hide of keyboard parts in GTWIN
Ver.2.A0	GT02 Ver.1.00 (New release)	- New model
	GT05 Ver.1.60 GT12 Ver.1.30 GT32 Ver.1.70	- SD recipe function - Function for communication errors in case of PLC multiple connection - Alarm history data save in SD memory card - Multiplication and division of write device data
	GT05 Ver.1.40 GT12 Ver.1.30 GT32 Ver.1.20	- Multiplication and division of write device data
Ver.2.B0	GT02L Ver.1.00 (New release)	- New model (GT02L)
	GT02 Ver.1.10 GT05 Ver.1.70 GT12 Ver.1.40 GT32 Ver.1.80	- True Type font for data parts

GTWIN version	GT-series version	Additional functions
Ver.2.B1	GT01 Ver.1.39 GT02 Ver.1.11 GT02L Ver.1.01 GT05 Ver.1.71 GT11 Ver.1.29 GT12 Ver.1.41 GT21 Ver.1.19 GT32 Ver.1.81	-Bug fixing
Ver.2.C0	GT02 Ver.1.30 GT02L Ver.1.20 GT05 Ver.1.90 GT12 Ver.1.60 GT32 Ver.2.00 GT32-E Ver.1.00	- New model（GT32-E） - FP monitor function - Added the mode to ignore CS/RS when using general-purpose serial communication. - Fixed font conversion function
Ver.2.C1	GT02 Ver.1.40 GT02L Ver.1.30 GT05 Ver.2.00 GT12 Ver.1.70 GT32 Ver.2.10 GT32-E Ver.1.10	- Vertical type display (GT05/GT32/GT32-E) - Device change function - Added the SD memory card installation flag in Basic Communication Area. - Added parts library.
Ver. 2.C2	GT02 Ver.1.41 GT02L Ver.1.31 GT05 Ver.2.01 GT12 Ver.1.71 GT32 Ver.2.11 GT32-E Ver.1.11	- Contrast adjustment function in GT Configuration settings (GT02/GT02L/GT12) - Bug fixing
Ver. 2.D0	GT02 Ver.1.50 GT02L Ver.1.40 GT05 Ver.2.10 GT12 Ver.1.80 GT32 Ver.2.20 GT32-E Ver.1.20	- Supports FP7. - Supports the 64-bit Windows 7.
Ver. 2.E0	GT02 Ver.1.60 GT02L Ver.1.50 GT03-E Ver.1.00 (New release) GT05 Ver.2.20 GT12 Ver.1.90 GT32 Ver.2.30 GT32-E Ver.1.30	- New model (GT03M-E)
Ver. 2.E1	GT02 Ver.1.70 GT02L Ver.1.60 GT03-E Ver.1.10 GT05 Ver.2.30 GT12 Ver.2.00 GT32 Ver.2.40 GT32-E Ver.1.40	- New model (GT03T-E) - Added the function to upload data in a SD card of GT. - Added the CSV output for GT Usage Device. - Supports Russian and Vietnamese displays.

Chapter 1

Features and Functions

1.1 Features and Functions of GT Series

Can be installed in a small space.
As the GT series is a small and thin-shaped body, it can be installed in a small space. Also, as the projecting part from a wall surface is 4 mm, it looks neat after installation. It can be also installed upright.

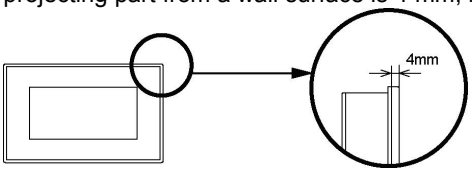

Number of colors can be selected as usage.

GT series	Number of colors
GT21C	256 colors
GT03T-E/GT05S/GT32T0/GT32T1/GT32T-E	4096 colors

Monochrome 8-gradation (GT12)/16-gradation (GT03M-E/GT32M-E) display function is available.
The monochrome 8-gradation and 16-gradation displays can be selected as well as the existing monochrome 2-gradation display, so that the screen can be displayed finely.

Easily shows a current state changing the backlight on the monochrome type.
For the monochrome type (3-color LED backlight type), changing in the backlight color makes it easy to grasp a current state at a glance.
"Green, orange, red" type and "White, red, pink" type is available for the 3-color LED backlight type.

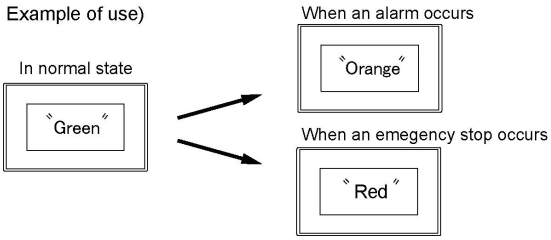

Analog touch panel provided
As an analog touch panel is provided, it allows maximum flexibility in the switch layout and size.

Screens can be created easily, using a special screen creation tool Terminal GTWIN.
Screen contents can be easily created using the dedicated Terminal GTWIN tool. Screens are put together simply by selecting parts from libraries and positioning them in place.
Various parts for numerous applications are provided such as 256-color 3D parts.

Screen data of the other models can be used with the model conversion function.
Screen data can be converted from the low-resolution model to high-resolution model, e.g. from GT01 to GT11, from GT21 to GT32.

The communication methods support RS232C/RS422 (RS485)
The communication methods to PLCs support RS232C/RS422(RS485). Also it can be connected to PLCs manufactured by other companies.

Structure adapted to surrounding environments
IP67: GT02, GT03-E, GT12, GT32-E
IP65: GT01, GT02L, GT05, GT11, GT21, GT32

High-intensity LED provided (LED backlight type)
As the high-intensity LED is provided, the screen is bright, and the backlight does not need to be replaced.

Saving various data with a SD memory card (Model equipped with SD memory card slot)
Various data can be saved and read out with a SD memory card.

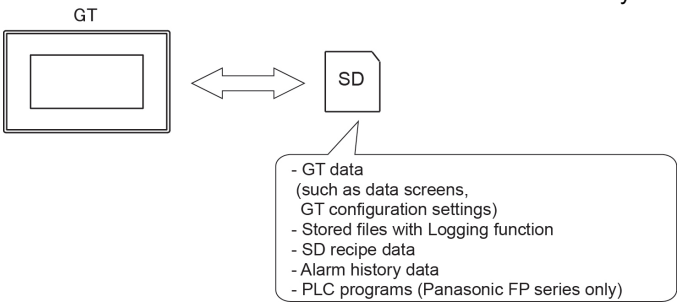

Power can be supplied to the 5 V DC type with only one communication cable.
The power is supplied from the TOOL port of a PLC, therefore, the wiring man-hours can be significantly reduced.

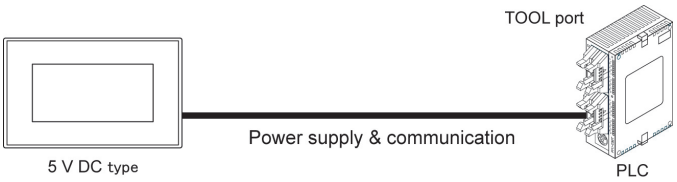

Applicable models:

Panasonic FP series

Mitsubishi Electric Corporation FX series

Three methods are available to switch the screen.
Switching by the instruction from PLC
The screens can be switched by writing to the “basic communication area” from the PLC ladder program.

Switching with the touch-screen operation
The screens can be switched on the GT by using the “function switching parts” provided in the parts library of the GTWIN that has a function to switch the screens.

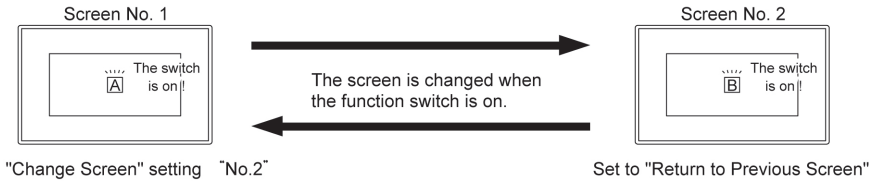

Switching automatically
The GT man unit has an “Auto-paging” function in the configuration setting that automatically switches the screen to a specified screen number when a certain period of time has elapsed. This function can be used to switch screens automatically.

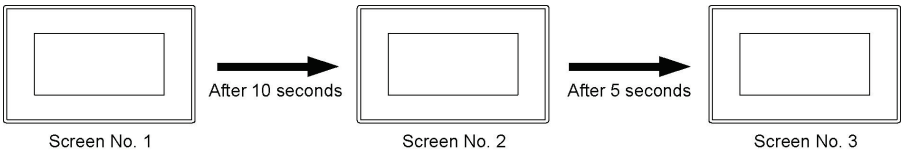

Through function is convenient for debugging

A convenient “through” function makes it possible to transfer data from the GT and carry out PLC debugging at the same time that communication is going on between the GT and the FP series PLC. This significantly boosts efficiency in the workplace.

For TOOL port models

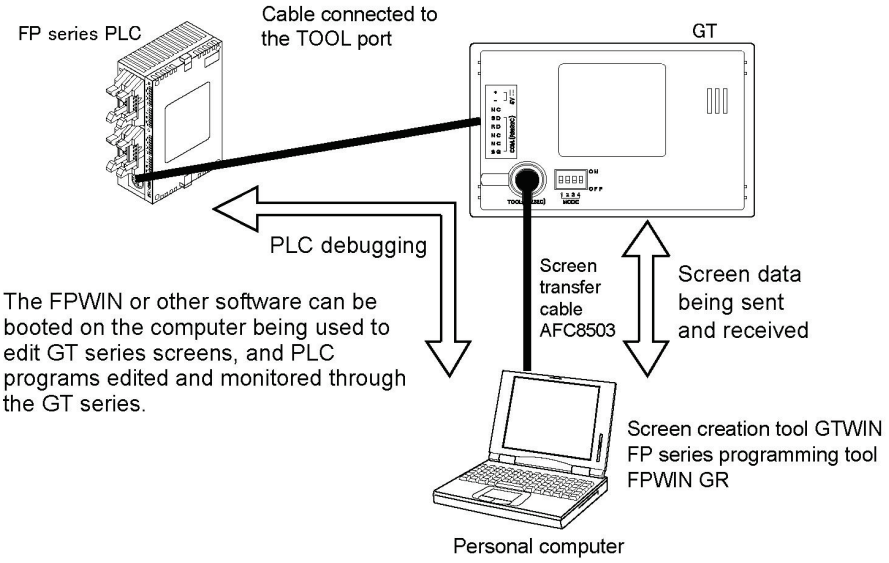

For USB port/Ethernet port models

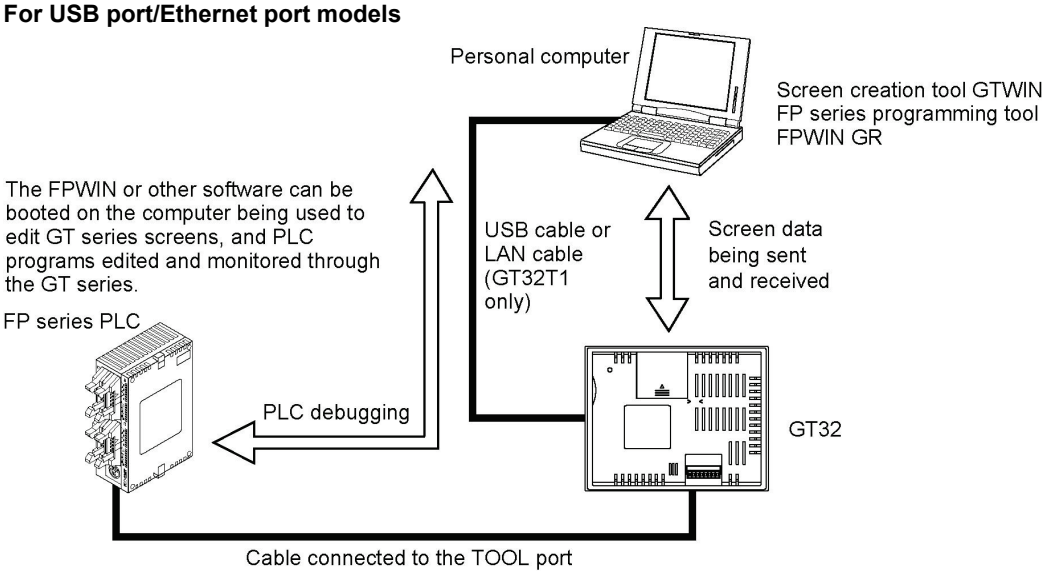

New functions can be available by upgrading the GT.

The GT can be easily upgraded by downloading the latest firmware from our website or using the GT Ver_UP tool.

Security Function

- Password protection function

A password (max. 8 characters) is specified for transferring the screen data to GT from GTWIN. This function prevents the outflow of screen data if anyone except the administrator tries to read out the screen data.

- Operation security function (GT02, GT02L, GT03-E, GT05, GT12, GT32, GT32-E)

This function is used to limit the contents of displays and operations by setting the security level of users for each part.
The level of operators are managed with the security password.

GT link function (GT02, GT02L, GT03-E, GT05, GT12, GT32, GT32-E)

This function is used to connect multiple GT units (up to 32 units) to a single PLC (Panasonic FP series). RS485 communication is used.
Note) Station numbers should be set to the connected GT units. The both settings for GT and PLC are necessary.

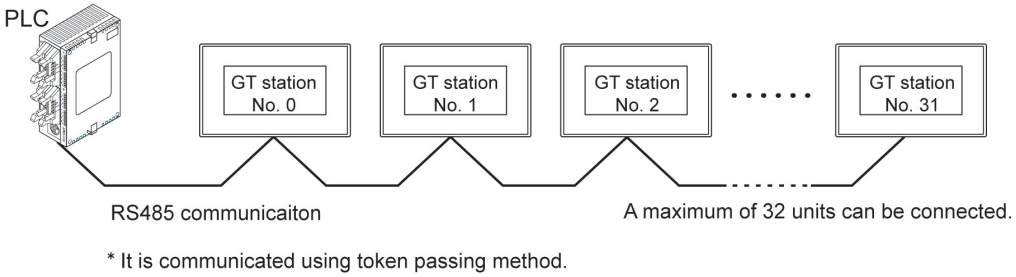

PLC Multiple Connection (GT02, GT02L, GT03-E, GT05, GT12, GT32, GT32-E)

This is a function that enables multiple Panasonic PLCs (FP series) (up to 31 units) to be connected with one GT. Communication is performed via RS485.

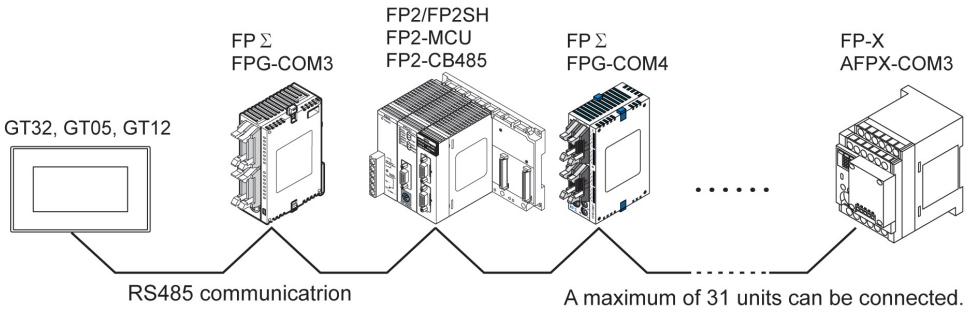

Logging function (Model equipped with SD memory card slot)
It is a function to collect and log arbitrary device values into a PLC at a constant period or when conditions are met.
Logged data is saved in a SD memory card inserted in this unit in CSV format.
This function is useful for obtaining the history of data.

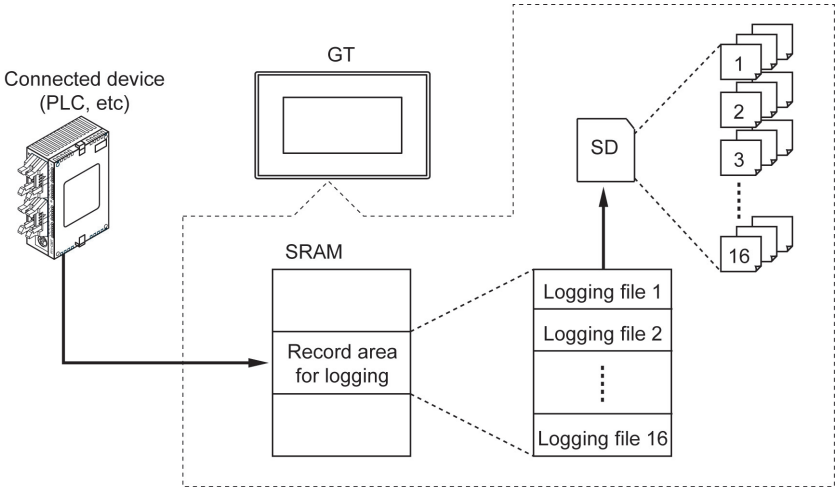

FP monitor function (GT02, GT02L, GT03-E, GT05, GT12, GT32, GT32-E)
This function is used to monitor or change the settings and data of FP-series PLC on the GT screen.
Without creating screens in advance or connecting to a PC, the operational check of equipment in the actual environment, the start-up of equipment and daily maintenance work can be performed efficiently.

1.2 Types of Units

1.2.1 GT Series

Item name	Model	Display	Interface specifications	Backlight	Power supply	COM port communication specification	Front panel color	Model No.
GT01	GT01	STN monochrome LCD (128x64 dots)	COM port TOOL port (RS232C compliant)	3-color LED (green, red, orange)	5 V DC	RS232C	Black	AIGT0030B1
							Ashgray	AIGT0030H1
						RS422 (RS485)	Black	AIGT0032B1
							Ashgray	AIGT0032H1
					24 V DC	RS232C	Black	AIGT0030B
							Ashgray	AIGT0030H
						RS422 (RS485)	Black	AIGT0032B
							Ashgray	AIGT0032H
				1-color LED (white)	5 V DC	RS232C	Black	AIGT0130B1
							Ashgray	AIGT0130H1
						RS422 (RS485)	Black	AIGT0132B1
							Ashgray	AIGT0132H1
					24 V DC	RS232C	Black	AIGT0130B
							Ashgray	AIGT0130H
						RS422 (RS485)	Black	AIGT0132B
							Ashgray	AIGT0132H
	GT01R			3-color LED (white, red, pink)	5 V DC	RS232C	Pure black	AIGT0230B1
							Silver	AIGT0230H1
						RS422 (RS485)	Pure black	AIGT0232B1
							Silver	AIGT0232H1
					24 V DC	RS232C	Pure black	AIGT0230B
							Silver	AIGT0230H
						RS422 (RS485)	Pure black	AIGT0232B
							Silver	AIGT0232H
GT02	GT02M0	STN monochrome LCD (240x96 dots)	COM port USB port (USB1.1 compliant)	3-color LED (white, red, pink)	5 V DC	RS232C	Pure black	AIG02MQ02D
							Silver	AIG02MQ03D
						RS422 (RS485)	Pure black	AIG02MQ04D
							Silver	AIG02MQ05D
	GT02M1				24 V DC	RS232C	Pure black	AIG02MQ12D
							Silver	AIG02MQ13D
						RS422 (RS485)	Pure black	AIG02MQ14D
							Silver	AIG02MQ15D
	GT02M2		COM port USB port (USB1.1 compliant) with SD memory card slot			RS232C	Pure black	AIG02MQ22D
							Silver	AIG02MQ23D
						RS422 (RS485)	Pure black	AIG02MQ24D
							Silver	AIG02MQ25D
	GT02G0		COM port USB port (USB1.1 compliant)	3-color LED (green, red, orange)	5 V DC	RS232C	Pure black	AIG02GQ02D
							Silver	AIG02GQ03D
						RS422 (RS485)	Pure black	AIG02GQ04D
							Silver	AIG02GQ05D
	GT02G1				24 V DC	RS232C	Pure black	AIG02GQ12D
							Silver	AIG02GQ13D
						RS422 (RS485)	Pure black	AIG02GQ14D
							Silver	AIG02GQ15D
	GT02G2		COM port USB port (USB1.1 compliant) with SD memory card slot			RS232C	Pure black	AIG02GQ22D
							Silver	AIG02GQ23D
						RS422 (RS485)	Pure black	AIG02GQ24D
							Silver	AIG02GQ25D

Item name	Model	Display	Interface specifi-cations	Backlight	Power supply	COM port commu-nication specifi-cation	Front panel color	Model No.
GT02L	**GT02L**	STN monochrome LCD (160x64 dots)	COM port USB port (USB1.1 compliant)	1-color LED (white)	5 V DC	RS232C	Black	AIG02LQ02D
						RS422 (RS485)		AIG02LQ04D
GT03-E	**GT03M-E**	STN monochrome LCD (320x240 dots)	COM port USB port (USB1.1 compliant)	1-color LED (white)	24 V DC	RS232C	Silver (Front sheet color)	AIG03MQ03DE
						RS422 (RS485)		AIG03MQ05DE
	GT03T-E	TFT color LCD (320x240 dots)	COM port USB port (USB1.1 compliant) with SD memory card slot	1-color LED (white)	24 V DC	RS232C	Silver (Front sheet color)	AIG03TQ13DE
						RS422 (RS485)		AIG03TQ15DE
GT05	**GT05M**	STN monochrome LCD (320x240 dots)	COM port USB port (USB1.1 compliant) with SD memory card slot	3-color LED (white, red, pink)	24 V DC	RS232C	Pure black	AIG05MQ02D
							Silver	AIG05MQ03D
						RS422 (RS485)	Pure black	AIG05MQ04D
							Silver	AIG05MQ05D
	GT05G			3-color LED (green, red, orange)		RS232C	Pure black	AIG05GQ02D
							Silver	AIG05GQ03D
						RS422 (RS485)	Pure black	AIG05GQ04D
							Silver	AIG05GQ05D
	GT05S	4096-color STN color LCD (320x240 dots)		1-color LED (white)		RS232C	Pure black	AIG05SQ02D
							Silver	AIG05SQ03D
						RS422 (RS485)	Black	AIG05SQ04D
							Ashgray	AIG05SQ05D
GT11	**GT11**	STN monochrome LCD (240x96 dots)	COM port TOOL port (RS232C compliant)	3-color LED (green,red, orange)	24 V DC	RS232C	Black	AIGT2030B
							Ashgray	AIGT2030H
						RS422 (RS485)	Black	AIGT2032B
							Ashgray	AIGT2032H
				1-color LED (white)		RS232C	Black	AIGT2130B
							Ashgray	AIGT2130H
						RS422 (RS485)	Black	AIGT2132B
							Ashgray	AIGT2132H
GT12	**GT12M0**	STN monochrome LCD (320x120 dots)	COM port TOOL port (RS232C compliant)	3-color LED (white, red, pink)	24 V DC	RS232C	Pure black	AIG12MQ02D
							Silver	AIG12MQ03D
						RS422 (RS485)	Pure black	AIG12MQ04D
							Silver	AIG12MQ05D
	GT12M1		COM port USB port (USB1.1 compliant) with SD memory card slot			RS232C	Pure black	AIG12MQ12D
							Silver	AIG12MQ13D
						RS422 (RS485)	Pure black	AIG12MQ14D
							Silver	AIG12MQ15D
	GT12G0		COM port TOOL port (RS232C compliant)	3-color LED (green, red, orange)		RS232C	Pure black	AIG12GQ02D
							Silver	AIG12GQ03D
						RS422 (RS485)	Pure black	AIG12GQ04D
							Silver	AIG12GQ05D
	GT12G1		COM port USB port (USB1.1 compliant) with SD memory card slot			RS232C	Pure black	AIG12GQ12D
							Silver	AIG12GQ13D
						RS422 (RS485)	Pure black	AIG12GQ14D
							Silver	AIG12GQ15D

Item name	Model	Display	Interface specifi-cations	Backlight	Power supply	COM port commu-nication specifi-cation	Body color	Model No.
GT21	GT21	256-color STN color LCD (320x240 dots)	COM port TOOL port (RS232C compliant)	1-color LED (white)	5 V DC	RS232C	Pure black	AIGT2230B
							Silver	AIGT2230H
						RS422 (RS485)	Pure black	AIGT2232B
							Silver	AIGT2232H
GT32	GT32M	STN mono-chrome LCD (320x240 dots)	COM port USB port (USB1.1 compliant) with SD memory card slot	CFL	24 V DC	RS232C	Pure black	AIG32MQ02D
							Silver	AIG32MQ03D
						RS422 (RS485)	Pure black	AIG32MQ04D
							Silver	AIG32MQ05D
	GT32T0	4096-color TFT color LCD (320x240 dots)				RS232C	Pure black	AIG32TQ02D
							Silver	AIG32TQ03D
						RS422 (RS485)	Pure black	AIG32TQ04D
							Silver	AIG32TQ05D
	GT32T1		COM port USB port (USB1.1 compliant) Ethernet port with SD memory card slot with sound output jack			RS232C	Pure black	AIG32TQ12D
							Silver	AIG32TQ13D
						RS422 (RS485)	Pure black	AIG32TQ14D
							Silver	AIG32TQ15D
GT32-E	GT32M-E	TFT monochro me LCD (320x240 dots)	COM port USB port (USB1.1 compliant) with SD memory card slot	1-color LED (white)	24 V DC	RS232C	Silver	AIG32MQ03DE
						RS422 (RS485)		AIG32MQ05DE
	GT32T-E	4096-color TFT color LCD (320x240 dots)				RS232C		AIG32TQ03DE
						RS422 (RS485)		AIG32TQ05DE

1.2.2 Options and Repair Parts

PLC connecting cables

Item name	Contents		Product No.
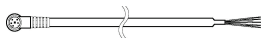	For connection between GT01/GT02/GT02L (5V DC type (RS232C)) and our FP-series TOOL port Mini-DIN 5-pin loose-wire cable * A ferrite core is supplied with the main unit.	2 m	AIGT8142
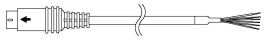	For connection between GT01/GT02/GT02L (5V DC type (RS422)) and MITSUBISHI FX-series TOOL port Mini-DIN 8-pin loose-wire cable * A ferrite core is supplied with the main unit.	2 m	AIGT8152
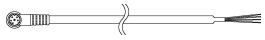	For connection between 24V DC type (RS232C) and our FP-series TOOL port Mini-DIN 5-pin loose-wire cable	2 m	AIGT8162
		5 m	AIGT8165
		10 m	AIGT8160
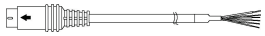	For connection between 24V DC type (RS422) and MITSUBISHI FX-series TOOL port Mini-DIN 8-pin loose-wire cable	5 m	AIGT8175
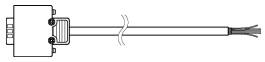	For connection to COM port of FP2/FP2SH and FP2 computer communication unit D-SUB 9-pin loose-wire cable	2 m	AIP81842

Maintenance parts

Item name		Contents			Product No.
Waterproof packing	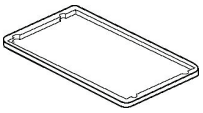	For GT01	For repair	10 in set	AIGT081
		For GT02/GT02L Note)			AIG02810
		For GT03-E			AIG03810E
		For GT05			AIG05810
		For GT11			AIGT181
		For GT12			AIG2810
		For GT21			AIGT28121
		For GT32			AIG32810
		For GT32-E			AIG32810E
Attachment fittings	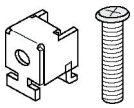	GT01/GT11 repair (4 pc/set)		5 sets	AIGT083
	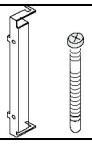	For GT05/GT21 repair (2 pc/set)		5 sets	AIGT28321
		For GT32/GT32-E repair (2 pc/set)		5 sets	AIG32830
Attachment fittings (with dedicated screws)	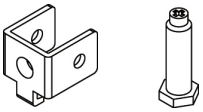	For GT02/GT02L/GT12 repair (4 pc each/set)		5 sets	AIG12830
Connector	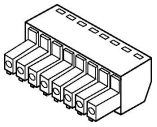	COM port connector for repair (8-pin)		5 in set	AIGT084

Note) The waterproof packing AIG02810 can be used for GT02L, however, it is different from the packing attached to the GT02L unit.

Options

Item name		Contents				Product No.
Front panel protective sheet	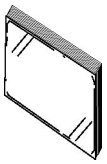	GT01	For GT01	Sold separately	10 in set	AIGT080
			For GT01R			AIGT080R
		For GT02/GT02L				AIG02800
		For GT05				AIG05800
		For GT11				AIGT280
		For GT12				AIG12800
		For GT21				AIGT28021
		For GT32		Sold separately		AIGT32800
Backup battery	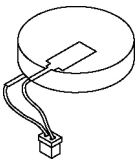	Backup battery for GT02M2,GT02G2/GT03T-E/ GT05/GT12/GT32/GT32-E			1 pc	AFPX-BATT

Commercial product

Item name		Contents		Model No.
Backup battery	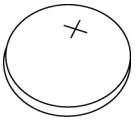	Backup battery for GT11/GT21	1 pc	CR2032

Item name	Printed logo on GT	GT version (Ver.)						Usable SD memory card	
		GT02M2 GT02G2	GT03T-E	GT05	GT12	GT32	GT32-E	Card type	Capacity
SD memory card	SD	-	-	1.39 or older	1.09 or older	1.49 or older	-	SD memory card	32M to 1GB
		-	-	1.40 or later	1.10 or later	1.50 or later	-	SD memory card	32M to 2GB
								SDHC memory card CLASS2 , 4	4GB to 16GB
	SDHC	1.00 or later	1.10 or later	1.39 or older	1.09 or older	1.49 or older	1.00 or later	SD memory card	32M to 1GB
		1.00 or later	1.10 or later	1.40 or later	1.10 or later	1.50 or later	1.00 or later	SD memory card	32M to 2GB
								SDHC memory card	4GB to 32GB

Note) Select the capacity of a SD memory card according to the logo printed on the GT and the version of GT firmware.

1.3 Screen Creation Tool

1.3.1 Tools Required for Screen Creation

1. Tool software
It can be used for all the models in the GT series.

2. Screen transfer cable (Cable for connecting a PC)
For GT01, GT11 and GT21:
A cable between a PC (D-sub 9-pin) and GT (TOOL port) is available.

For GT02, GT02L, GT03-E, GT05, GT12, GT32 and GT32-E:
Prepare a commercial USB cable or LAN cable (for GT32T1 only).

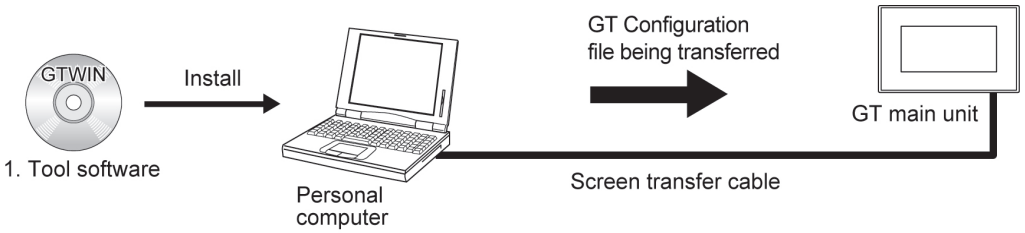

1.3.2 Software Usage Environment and Applicable Cables

Screen creation tool software Terminal GTWIN Ver. 2

Software type		Required OS	Hard disk capacity	Product No.
Terminal GTWIN Ver. 2	English-language version	Windows® 7 Windows Vista® Windows® 2000 Windows® XP	600 MB or more	AIGT8001V2
Terminal GTWIN Ver. 2 Upgrade model	English-language version			AIGT8001V2R

Note1) The latest version is provided free of charge via our website (http://industrial.panasonic.com/ac/e/dl_center/software/). (User registration is required. Free of charge)

■

Related software (Freeware)

Item name	Contents
Configurator WD IP address search tool	Address setting for the GT in Ethernet communication

Note) It can be downloaded from our website (http://industrial.panasonic.com/ac/e/dl_center/software/). (User registration is required. Free of charge)

Screen transfer cable

For connection between PC (USB) and Programmable Display (GT02/GT02L/GT03-E/GT05/GT12/GT32)

USB cable (Commercial product)	Applicable model	Cable type	Length
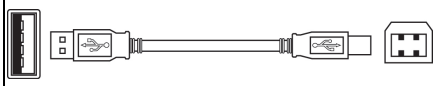	GT05/GT32/ GT32-E	USB2.0 (or 1.1) AB type	Max. 5 m
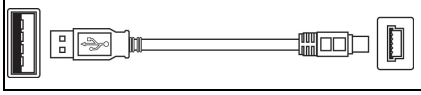	GT02/GT02L/ GT03-E/GT12	USB2.0 (or 1.1) cable A type (Male): miniB type male	Max. 5 m

Note) Windows® 2000 or later OS is required for the communication with a USB.

For connection between PC (RS232C) and Programmable Display (GT01/GT11/GT21)

D-sub connector cable	PC side connector	GT side connector	Specification	Product No.
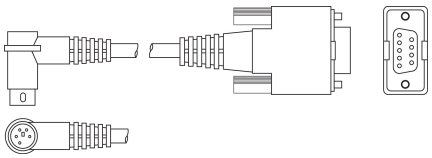	D-sub 9-pin	Mini DIN round 5-pin	L type (3 m)	AFC8503
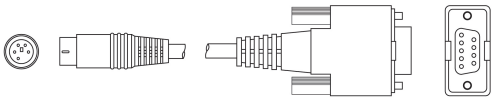			Straight type (3 m)	AFC8503S

Note) A USB/RS232C conversion cable is necessary to connect with a personal computer without a serial port using a PC connection cable.

LAN cable (Ethernet port) (GT32T1)

Either straight cable or crossing cable can be used.
(MDI/MDI-X Automatic crossover function)

Chapter 2

Names and Functions of Parts

2.1 Part Names

2.1.1 GT01, GT11 and GT21

GT01/GT01R

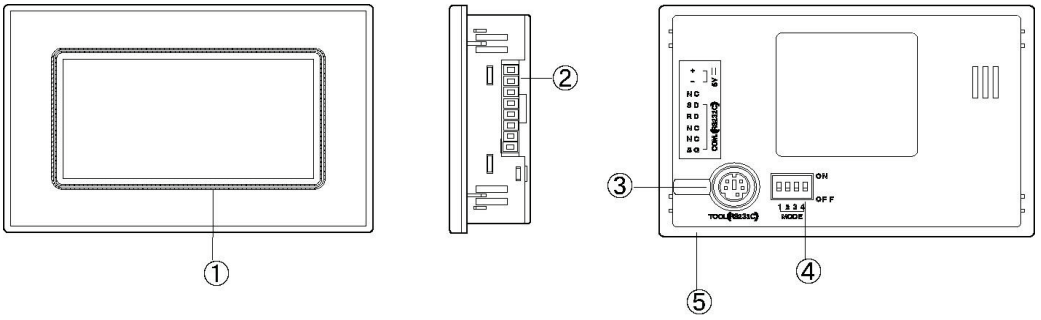

GT11

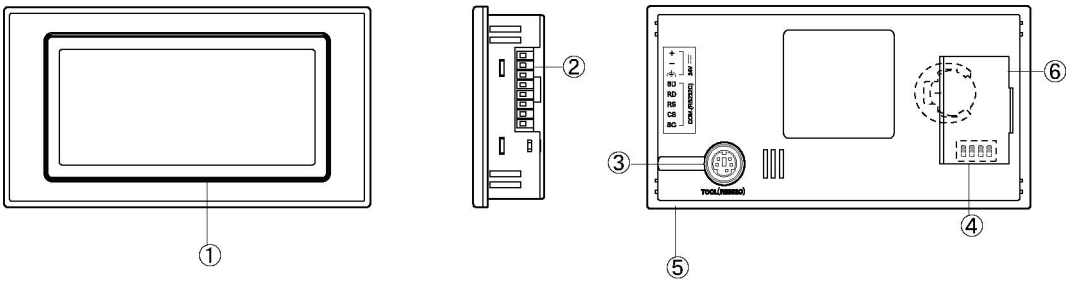

GT21

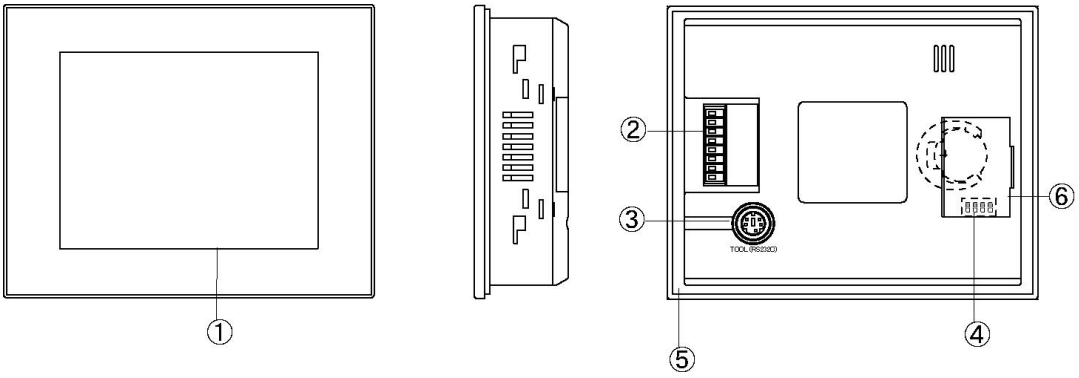

① **Touch screen**

Various screens are displayed here. Switches can be operated and data entered simply by touching the touch screen.
(A sheet is affixed to the touch panel to protect it from scratches when shipping. Please remove it before using the GT.)
Optional protective sheets are available to protect the touch screen surface and keep it clean.

Reference: <1.4.2 Options and Repair Parts>

② **COM port and power supply terminal**

This is a communication port (RS232C or RS422) for connecting to a PLC, host PC, or microcomputer board, and a power supply terminal for operation.

③ **TOOL port (GTWIN connection port)**

This port is used to connect the screen creation tool.

④ **Operation mode setting switches**

Setting the operation mode setting switches as follows when turning on the power supply enables the setting to inhibit to move to the system menu or enables to clear F-ROM.

Setting	Normal use (Factory default)	Inhibit system menu shift	Clear F-ROM
Switch setting			

Note: Do not use any settings other than the above settings.

⑤ **Waterproof packing**

This assures that the front panel is waterproof.

⑥ **Battery cover (for GT11 and GT21)**

When using a backup battery to be separately purchased, open this battery cover to install it.
The clock, PLC device hold data, alarm history and GT internal device hold data functions can be used with the backup battery.

Reference: <3.6.2 How to Install the Battery (Lithium Button Battery)>

2.1.2 GT02/GT02L

GT02M2, GT02G2

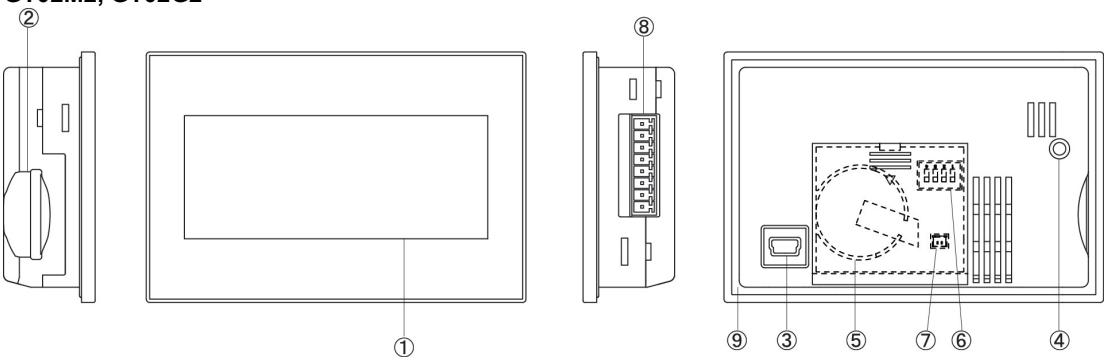

GT02M0, GT02M1, GT02G0, GT02G1

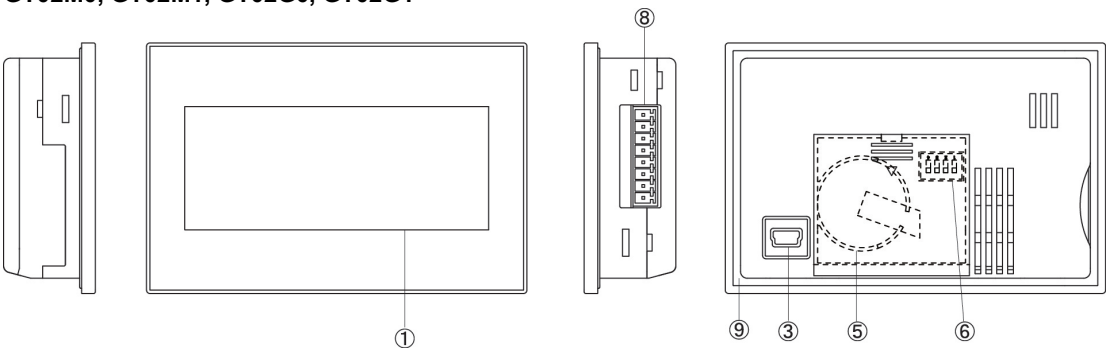

GT02L

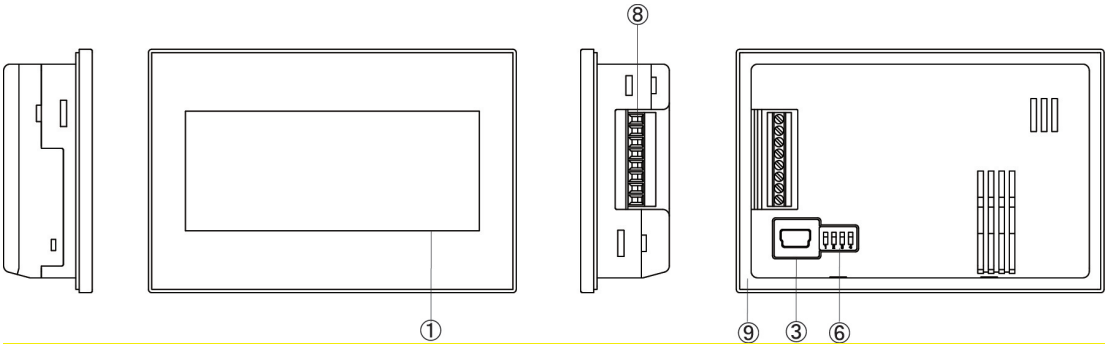

① **Liquid crystal display panel/touch panel**
Various screens are displayed here. A touch panel is provided on the liquid crystal display panel, and switches can be operated and data entered simply by touching the panel.
Optional protective sheets are also available to protect the touch panel and keep it clean.
(A sheet is affixed to the touch panel to protect it from scratches when shipping. Please remove it before using the GT.)

② **SD memory card slot**
A SD memory card is inserted in this slot.
- Saving from GTWIN: Operate on the GTWIN screen using a SD memory card read/writer.
- Saving from GT main unit: Operate on the SD memory card setting screen under the system menu.

③ **USB port**
This is a connector for connecting the screen creation tool. The commercial USB cable can be used.

④ **SD memory access lamp**
The lamp turns on while accessing a SD memory card.

⑤ **Battery cover**
When using a backup battery to be separately purchased, open this battery cover to install it.
The clock, PLC device hold data, alarm history and GT internal device hold data functions can be used with the backup battery.

⑥ **Operation mode setting switches**
Setting the operation mode setting switches as follows when turning on the power supply enables the setting to inhibit to move to the system menu or enables to clear F-ROM.

Setting	Normal use (Factory default)	Inhibit system menu shift	Clear F-ROM
Switch setting	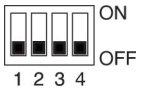		

The screen (backlight) flashes for a while when the F-ROM clear is executed.
Once the F-ROM clear is complete, the buzzer sounds and "Memory is cleared" is displayed on the screen. Set the operation mode setting switches to the state in the normal use after confirming this message, and turn on the power again.
Do not use any settings other than the above settings.

⑦ **Mounting location of connector for battery**

⑧ **COM port (PLC/external device connection port) and power supply terminal**
This is a communication port (RS232C or RS422) for connecting to a PLC, host PC, or microcomputer board, and a power supply terminal for operation.

⑨ **Waterproof packing**
This assures that the front panel is waterproof.

2.1.3 GT03-E

GT03M-E

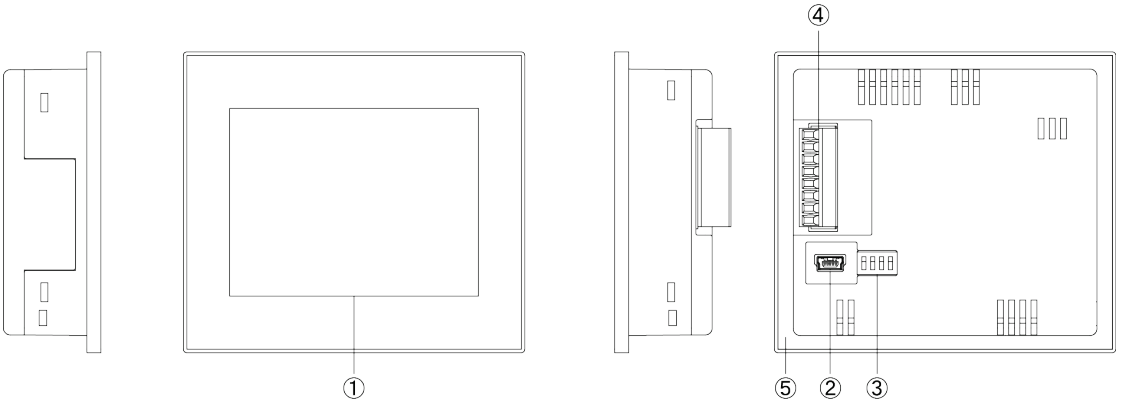

GT03T-E

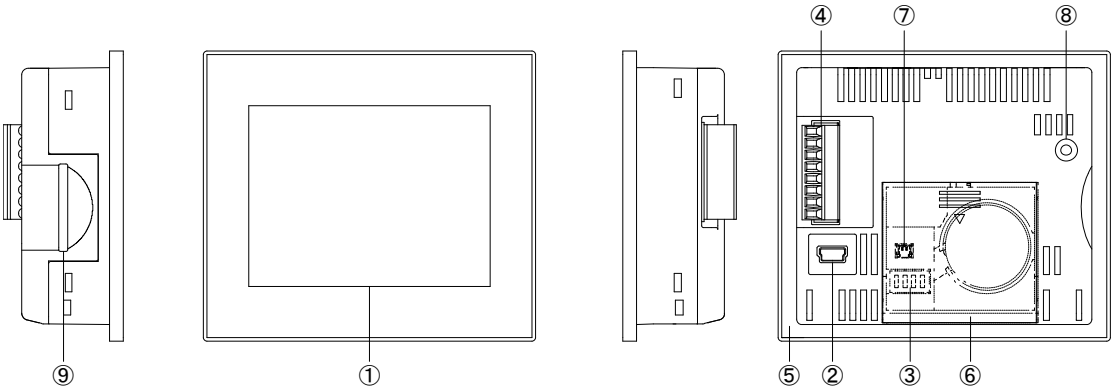

① Liquid crystal display panel/touch panel

Various screens are displayed here. A touch panel is provided on the liquid crystal display panel, and switches can be operated and data entered simply by touching the panel.

② USB port

This is a connector for connecting the screen creation tool. The commercial USB cable can be used.

③ Operation mode setting switches

Setting the operation mode setting switches as follows when turning on the power supply enables the setting to inhibit to move to the system menu or enables to clear F-ROM.

Setting	Normal use (Factory default)	Inhibit system menu shift	Clear F-ROM
Switch setting	ON OFF 1 2 3 4	ON OFF 1 2 3 4	ON OFF 1 2 3 4

The screen (backlight) flashes for a while when the F-ROM clear is executed.
Once the F-ROM clear is complete, the buzzer sounds and "Memory is cleared" is displayed on the screen. Set the operation mode setting switches to the state in the normal use after confirming this message, and turn on the power again.
Do not use any settings other than the above settings.

④ **COM port (PLC/external device connection port) and power supply terminal**
This is a communication port (RS232C or RS422) for connecting to a PLC, host PC, or microcomputer board, and a power supply terminal for operation.

⑤ **Waterproof packing**
This assures that the front panel is waterproof.

⑥ **Battery cover**
When using a backup battery to be separately purchased, open this battery cover to install it. The clock, PLC device hold data, alarm history and GT internal device hold data functions can be used with the backup battery.
⑦ **Mounting location of connector for battery**
⑧ **SD memory access lamp (Except GT03M-E)**
The lamp turns on while accessing a SD memory card. Do not remove the SD memory card when the lamp is lit.
⑨ **SD memory card slot (Except GT03M-E)**
A SD memory card is inserted in this slot.
- Saving from GTWIN: Operate on the GTWIN screen using a SD memory card read/writer.
- Saving from GT main unit: Operate on the SD memory card setting screen of the system menu.

2.1.4 GT05/GT12/GT32

GT05

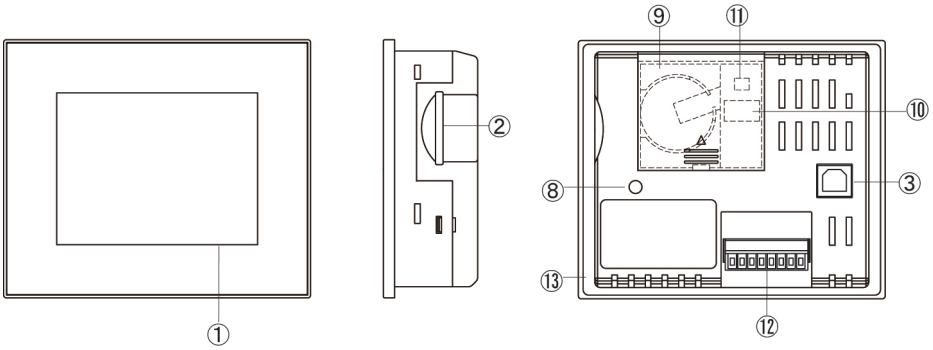

GT12

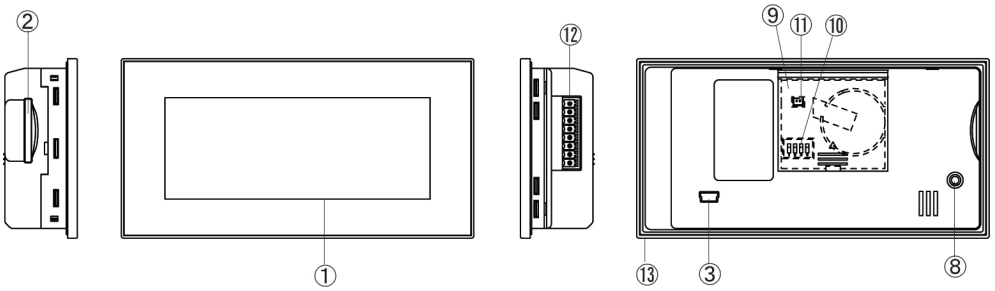

GT32

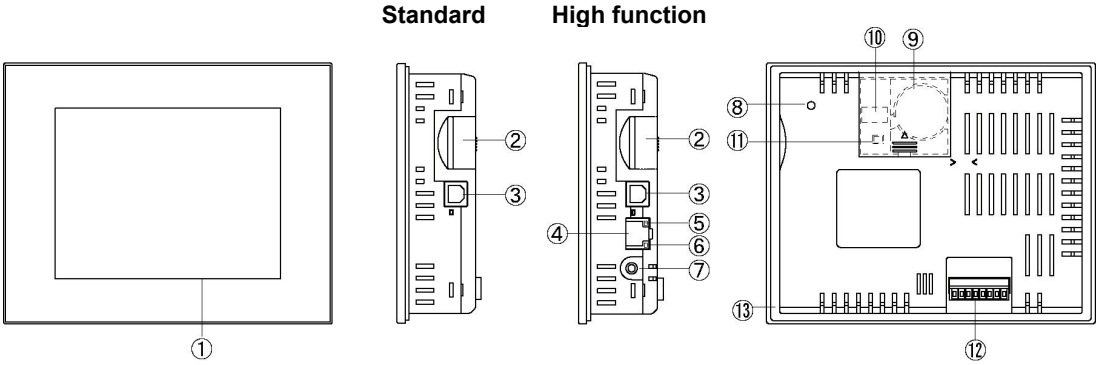

GT32-E

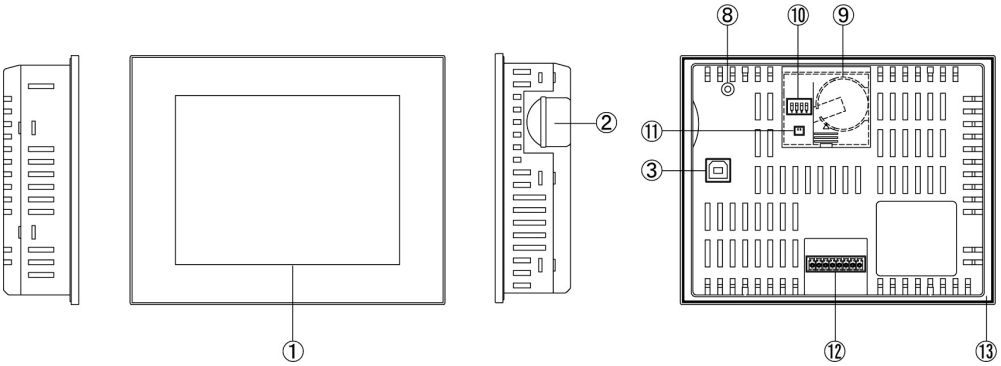

① **Liquid crystal display panel/touch panel**
Various screens are displayed here. A touch panel is provided on the liquid crystal display panel, and switches can be operated and data entered simply by touching the panel.
Optional protective sheets are also available to protect the touch panel and keep it clean.
(A sheet is affixed to the touch panel to protect it from scratches when shipping. Please remove it before using the GT.)

② **SD memory card slot (Except GT12M0 and GT12G0)**
A SD memory card is inserted in this slot.
- Saving from GTWIN: Operate on the GTWIN screen using a SD memory card read/writer.
- Saving from GT main unit: Operate on the SD memory card setting screen under the system menu.

③ **USB port**
This is a connector for connecting the screen creation tool. The commercial USB cable can be used.

④ **Ethernet port (RJ45) (GT32T1)**
This is a connector for connecting the screen creation tool. The maximum baud rate is 115200 bps when using Ethernet.

⑤ **SPEED lamp (GT32T1)**
It shows the baud rate when using Ethernet.
Light on: During 100Base communication
Blinking: During 10Base communication

⑥**LINK/ACT lamp (GT32T1)**
it shows the state of communication with Ethernet.
Light on: When linked
Blinking: While data reception

⑦**Sound output jack (GT32T1)**
Insert the speaker with a ϕ 3.5-mini plug amplifier for using the audio output function.

⑧**SD memory access lamp (Except GT12M0 and GT12G0)**
The lamp turns on while accessing a SD memory card.

⑨**Battery cover**
When using a backup battery to be separately purchased, open this battery cover to install it.
The clock, PLC device hold data, alarm history and GT internal device hold data functions can be used with the backup battery.

⑩ **Operation mode setting switches**
Setting the operation mode setting switches as follows when turning on the power supply enables the setting to inhibit to move to the system menu or enables to clear F-ROM.

Setting	Normal use (Factory default)	Inhibit system menu shift	Clear F-ROM
Switch setting			

The screen (backlight) flashes for a while when the F-ROM clear is executed.
Once the F-ROM clear is complete, the buzzer sounds and "Memory is cleared" is displayed on the screen. Set the operation mode setting switches to the state in the normal use after confirming this message, and turn on the power again.
Do not use any settings other than the above settings.

⑪ **Mounting location of connector for battery**

⑫ **COM port (PLC/external device connection port) and power supply terminal**
This is a communication port (RS232C or RS422) for connecting to a PLC, host PC, or microcomputer board, and a power supply terminal for operation.

⑬ **Waterproof packing**
This assures that the front panel is waterproof.

2.2 Terminal Layouts of COM Port

2.2.1 GT01

5 V/RS232C type

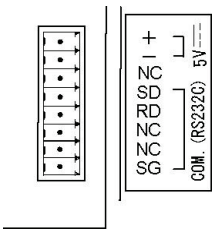

Pin name	Name	Signal direction	Product No.
+	+5 V	-	AIGT0030B1 AIGT0030H1 AIGT0130B1 AIGT0130H1 AIGT0230B1 AIGT0230H1
–	0 V	-	
NC	Not connected	-	
SD	Send data	GT→External device	
RD	Receive data	GT←External device	
NC	Not connected	-	
NC	Not connected	-	
SG	Signal ground	-	

Note: There is no RS and CS (control lines).

5 V/RS422(RS485) type

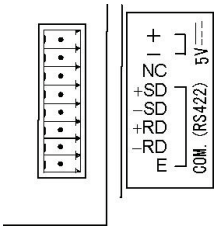

Pin name	Name	Signal direction	Product No.
+	+5 V	-	AIGT0032B1 AIGT0032H1 AIGT0132B1 AIGT0132H1 AIGT0232B1 AIGT0232H1
–	0 V	-	
NC	Not connected	-	
+SD	Send data	GT→External device(+)	
–SD	Send data	GT→External device(–)	
+RD	Receive data	GT←External device(+)	
–RD	Receive data	GT←External device(–)	
E	Terminal resistance	-	

Note: There is no RS and CS (control lines).

24 V/RS232C type

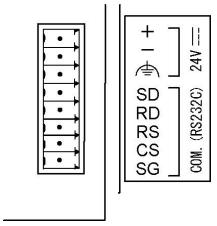

Pin name	Name	Signal direction	Product No.
+	+24 V	-	AIGT0030B AIGT0030H AIGT0130B AIGT0130H AIGT0230B AIGT0230H
–	0 V	-	
FG	Functional ground	-	
SD	Send data	GT→External device	
RD	Receive data	GT←External device	
NC	Not connected	-	
NC	Not connected	-	
SG	Signal ground	-	

Note: There is no RS and CS (control lines).

24 V/RS422(RS485) type

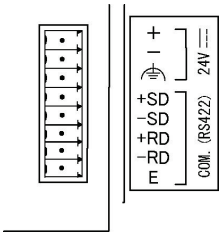

Pin name	Name	Signal direction	Product No.
+	+24 V	-	AIGT0032B AIGT0032H AIGT0132B AIGT0132H AIGT0232B AIGT0232H
–	0 V	-	
FG	Functional ground	-	
+SD	Send data	GT→External device(+)	
–SD	Send data	GT→External device(–)	
+RD	Receive data	GT←External device(+)	
–RD	Receive data	GT←External device(–)	
E	Terminal resistance	-	

Note: There is no RS and CS (control lines).

2.2.2 GT02

5 V/RS232C type

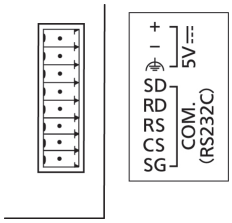

Pin name	Name	Signal direction	Product No.
+	+5 V	-	AIG02MQ02D AIG02MQ03D AIG02GQ02D AIG02GQ03D
–	0 V	-	
FG	Functional ground	-	
SD	Send data	GT→External device	
RD	Receive data	GT←External device	
RS	Request to send	GT→External device	
CS	Clear to send	GT←External device	
SG	Signal ground	-	

5 V/RS422(RS485) type

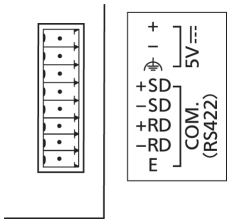

Pin name	Name	Signal direction	Product No.
+	+5 V	-	AIG02MQ04D AIG02MQ05D AIG02GQ04D AIG02GQ05D
–	0 V	-	
FG	Functional ground	-	
+SD	Send data	GT→External device(+)	
–SD	Send data	GT→External device(–)	
+RD	Receive data	GT←External device(+)	
–RD	Receive data	GT←External device(–)	
E	Terminal resistance	-	

Note: There is no RS and CS (control lines).

24 V/RS232C type

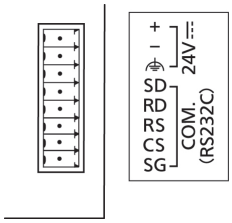

Pin name	Name	Signal direction	Product No.
+	+24 V	-	AIG02MQ12D AIG02MQ13D AIG02MQ22D AIG02MQ23D AIG02GQ12D AIG02GQ13D AIG02GQ22D AIG02GQ23D
–	0 V	-	
FG	Functional ground	-	
SD	Send data	GT→External device	
RD	Receive data	GT←External device	
RS	Request to send	GT→External device	
CS	Clear to send	GT←External device	
SG	Signal ground	-	

24 V/RS422(RS485) type

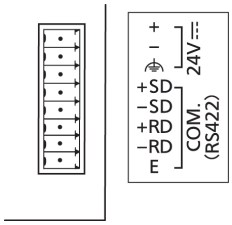

Pin name	Name	Signal direction	Product No.
+	+24 V	-	AIG02MQ14D AIG02MQ15D AIG02MQ24D AIG02MQ25D AIG02GQ14D AIG02GQ15D AIG02GQ24D AIG02GQ25D
–	0 V	-	
FG	Functional ground	-	
+SD	Send data	GT→External device(+)	
–SD	Send data	GT→External device(–)	
+RD	Receive data	GT←External device(+)	
–RD	Receive data	GT←External device(–)	
E	Terminal resistance	-	

Note: There is no RS and CS (control lines).

2.2.3 GT02L

5 V/RS232C type

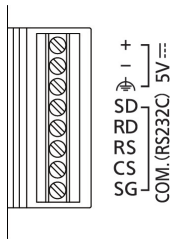

Pin name	Name	Signal direction	Product No.
+	+5 V	-	AIG02LQ02D
–	0 V	-	
FG	Functional ground	-	
SD	Send data	GT→External device	
RD	Receive data	GT←External device	
RS	Request to send	GT→External device	
CS	Clear to send	GT←External device	
SG	Signal ground	-	

5 V/RS422(RS485) type

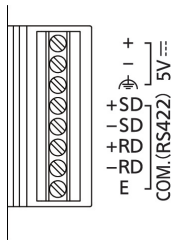

Pin name	Name	Signal direction	Product No.
+	+5 V	-	AIG02LQ04D
–	0 V	-	
FG	Functional ground	-	
+SD	Send data	GT→External device(+)	
–SD	Send data	GT→External device(–)	
+RD	Receive data	GT←External device(+)	
–RD	Receive data	GT←External device(–)	
E	Terminal resistance	-	

Note: There is no RS and CS (control lines).

2.2.4 GT11/GT12

24 V/RS232C type

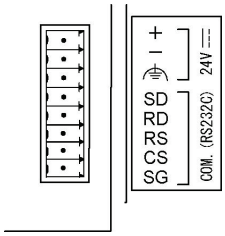

Pin name	Name	Signal direction	Product No.
+	+24 V	-	AIGT2030B AIGT2030H AIGT2130B AIGT2130H AIG12MQ02D AIG12MQ03D AIG12MQ12D AIG12MQ13D AIG12GQ02D AIG12GQ03D AIG12GQ12D AIG12GQ13D
–	0 V	-	
FG	Functional ground	-	
SD	Send data	GT→External device	
RD	Receive data	GT←External device	
RS	Request to send	GT→External device	
CS	Clear to send	GT←External device	
SG	Signal ground	-	

24 V/RS422(RS485) type

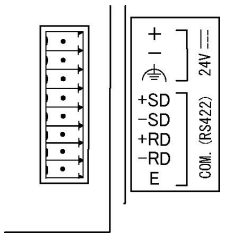

Pin name	Name	Signal direction	Product No.
+	+24 V	-	AIGT2032B AIGT2032H AIGT2132B AIGT2132H AIG12MQ04D AIG12MQ05D AIG12MQ14D AIG12MQ15D AIG12GQ04D AIG12GQ05D AIG12GQ14D AIG12GQ15D
–	0 V	-	
FG	Functional ground	-	
+SD	Send data	GT→External device(+)	
–SD	Send data	GT→External device(–)	
+RD	Receive data	GT←External device(+)	
–RD	Receive data	GT←External device(–)	
E	Terminal resistance	-	

Note: There is no RS and CS (control lines).

2.2.5 GT03-E/GT21

24 V/RS232C type

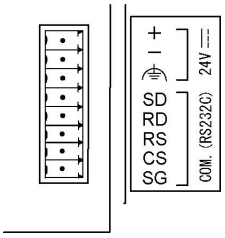

Pin name	Name	Signal direction	Product No.
+	+24 V	-	AIGT2230B AIGT2230H AIG03MQ03DE AIG03TQ13DE
–	0 V	-	
FG	Functional ground	-	
SD	Send data	GT→External device	
RD	Receive data	GT←External device	
RS	Request to send	GT→External device	
CS	Clear to send	GT←External device	
SG	Signal ground	-	

24 V/RS422(RS485) type

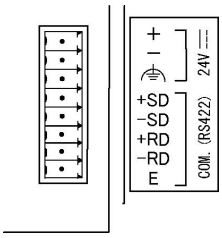

Pin name	Name	Signal direction	Product No.
+	+24 V	-	AIGT2232B AIGT2232H AIG03MQ05DE AIG03TQ15DE
–	0 V	-	
FG	Functional ground	-	
+SD	Send data	GT→External device(+)	
–SD	Send data	GT→External device(–)	
+RD	Receive data	GT←External device(+)	
–RD	Receive data	GT←External device(–)	
E	Terminal resistance	-	

Note: There is no RS and CS (control lines).

2.2.6 GT05/GT32/GT32-E

24 V/RS232C type

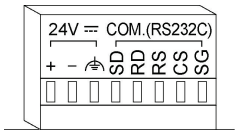

Pin name	Name	Signal direction	Product No.
+	+24 V	-	AIG05MQ02D AIG05MQ03D AIG05GQ02D AIG05GQ03D AIG05SQ02D AIG05SQ03D AIG32MQ02D AIG32MQ03D AIG32TQ02D AIG32TQ03D AIG32TQ12D AIG32TQ13D AIG32MQ03DE AIG32TQ03DE
–	0 V	-	
FG	Functional ground	-	
SD	Send data	GT→External device	
RD	Receive data	GT←External device	
RS	Request to send	GT→External device	
CS	Clear to send	GT←External device	
SG	Signal ground	-	

24 V/RS422(RS485) type

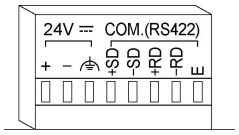

Pin name	Name	Signal direction	Product No.
+	+24 V	-	AIG05MQ04D AIG05MQ05D AIG05GQ04D AIG05GQ05D AIG05SQ04D AIG05SQ05D AIG32MQ04D AIG32MQ05D AIG32TQ04D AIG32TQ05D AIG32TQ14D AIG32TQ15D AIG32MQ05DE AIG32TQ05DE
–	0 V	-	
FG	Functional ground	-	
+SD	Send data	GT→External device(+)	
–SD	Send data	GT→External device(–)	
+RD	Receive data	GT←External device(+)	
–RD	Receive data	GT←External device(–)	
E	Terminal resistance	-	

Note: There is no RS and CS (control lines).

2.3 Connecting to Screen Creation Tool GTWIN

2.3.1 TOOL Port

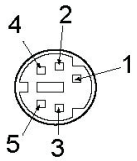

Pin No.	Name	Abbre.	Signal direction
1	Signal ground	SG	-
2	Send data	SD	GT→External device
3	Receive data	RD	GT←External device
4	Not connected	N.C.	-
5	+5 V	(+5V)	-

Note:

- The +5V of Pin 5 is reserved for the FP Programmer II. It should not be used for any other application. If using it, there is a restriction on the ambient temperature. The pin 5 of GT01 is N.C.

2.3.2 USB Port

USB connection

Communication with our software such as GTWIN becomes available by connecting to a PC with a USB cable.

Functions enabled by USB connection

- Through function using our PLCs
- Screen transfer

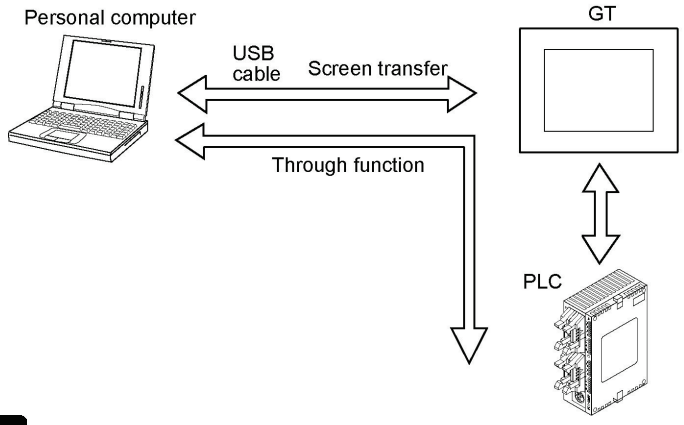

Note: If more than one programmable display unit or AE20 are connected to a PC using the USB port, the communication is not available.

2.3.3 Ethernet Port

Ethernet connection

GT32T1 has an Ethernet port. Communication with our software such as GTWIN becomes available by connecting to a PC with a LAN cable.

Ethernet communication function

- Screen transfer (Baud rate: fixed at 115200 bps. It takes at least 3 times longer than the transfer using USB.)

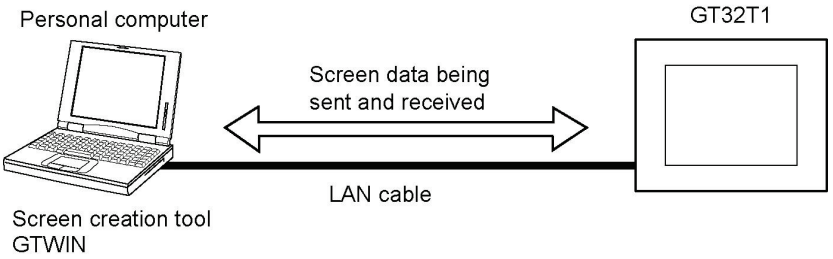

- Communication with our PLCs using the through function

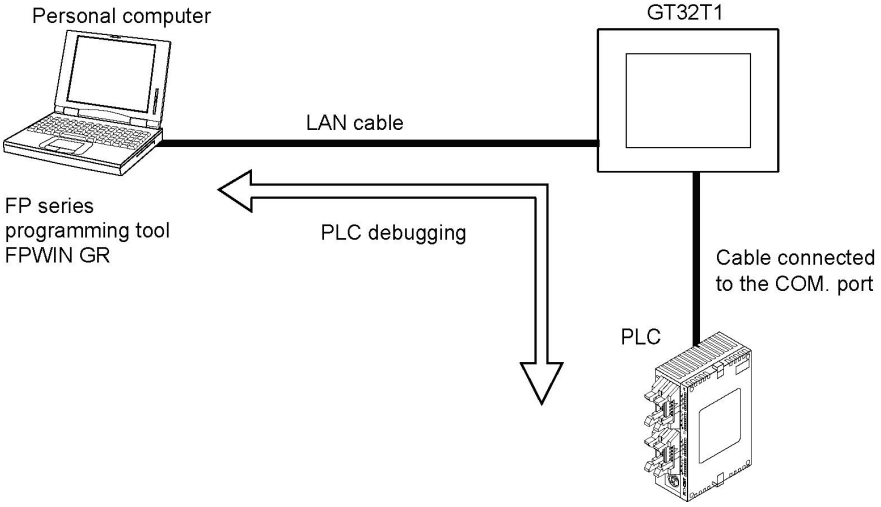

* Specifying the destinations to connect enables the communication with multiple units using a HUB.

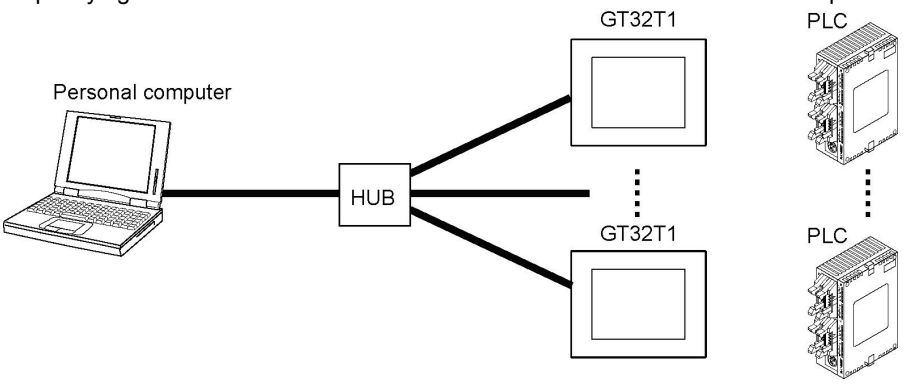

Required items for connection

- **LAN cable**

  Either straight cable or crossing cable can be used.
(MDI/MDI-X Automatic crossover function)

Settings for Ethernet connection

Follow the procedure below to communicate with the Ethernet connection.

1. Connect the GT to a PC with an Ethernet cable.
2. Specify the settings such as IP address for the GT.
3. Startup the GTWIN and specify the communication condition.

The factory settings are as follows.

IP Address	**192.168.1.5**
Subnetmask	**255.255.255.0**
Default Gateway	**192.168.1.**
Port No	**9094**

Note) Setting items such as IP address for the GT can be specified in the System Menu.

GTWIN setting

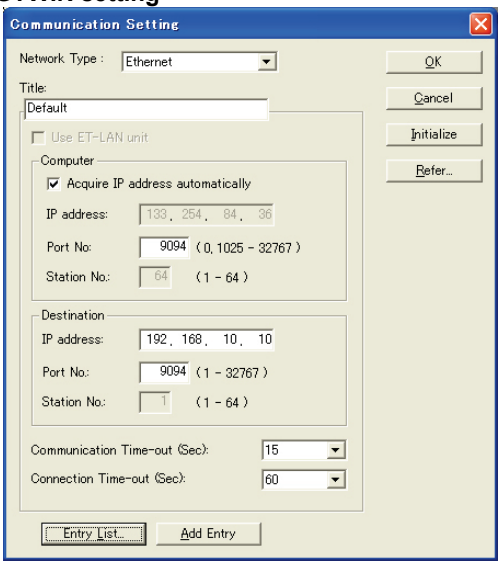

Network type: Ethernet
Title: Input an arbitrary title (Up to 38 one-byte characters)
Computer:
Check “Acquire IP address automatically”.
The default setting is to use the IP address currently being used in the computer.
Click [OK] to finish the setting.

Note) When sing multiple Ethernet cards, specify manually.

IP address: When it is not displayed, set the property of the TCP/IP in the items such as Network of the control panel. IP address can be input or changed.
Note) The setting procedure varies depending on the OS used. For the details, refer to the manual/help of the OS.

Port No.: Set to 0 or within the range of 1025 to 32767 in decimal.
For using it in the GTWIN, set it to 0.

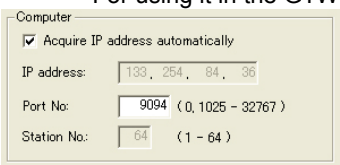

• **Setting of destination (PLC side)**
IP address: Specify the IP address of the GT to be connected in decimal.
Port No.: Set it within the range of 1 to 32767 in decimal. (Default: 9094)
Specify the same setting as the one of GT.

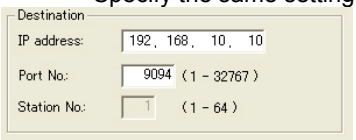

• **Communication time out:** Set the time-out period after connection establishment for every communication within the range of 1 to 950 seconds. (Default: 15) (it is not linked to this setting until a connection is established)
• **Connection time out:** Set the time-out period until connection establishment within the range of 1 to 180 seconds. (Default: 60)

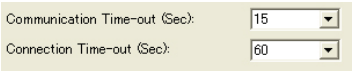

Setting with IP search tool (Config WD. exe)
The settings of the GT can be specified with the IP address search tool of Configurator WD (Ver.1.11 or later).
The IP search tool (Config WD. Exe) can be downloaded for free from our website
URL: http://industrial.panasonic.com/ac/e/dl_center/software/
(User registration is required.: Free of charge)

Chapter 3

Installation and Wiring

3.1 Installation

3.1.1 Installation Environment

When installing and using the GT series, always make sure the following conditions are observed.

Usage conditions
Operating environment (Use the unit within the range of the general specifications when installing)

- Ambient temperatures: 0 to +50 °C
  (It varies according to models when installing the unit in a horizontal orientation or using a C-NET adapter and FP programmer II.)
- Ambient humidity should be 20 to 85% RH (at 25 °C) and non-condensing.
- Usable altitude: Altitude 2,000 m or less
- For use in pollution Degree 2 environment
- Do not use it in the following environments.
  - Direct sunlight, wind and rain. (This product is not designed for outdoor use.)
  - Sudden temperature changes causing condensation.
  - Inflammable or corrosive gas.
  - Excessive airborne dust, metal particles or saline matter.
  - Benzine, paint thinner, alcohol or other organic solvents or strong alkaline solutions such as ammonia or caustic soda.
  - Direct vibration, shock or places always exposed to drop of water.
    (This unit is warranted by IP65/IP67 (depending on models) for panel mounting, however, this applies to initial values.)
  - Influence from power transmission lines, high voltage equipment, power cables, power equipment, radio transmitters, or any other equipment that would generate high switching surges. (100 mm or more)

The usage conditions for Tough series (GT03-E/GT32-E) are as follows.

- Ambient temperatures: -20 to +60 °C (In horizontal orientation, when sitting upright in vertical orientation or when using a battery: -20 to +55 °C)
- Ambient humidity should be 10 to 90% RH (at 25°C) and non-condensing.
  - The upper limit of the humidity at each temperature is as below.
  (Below 40 °C; 90%RH, 50 °C; 55%RH, 60 °C; 35%RH)
  - If the product is exposed to heavy rain, condensation might be caused by sudden temperature changes.
- Usable altitude: Altitude 2,000 m or less
- For use in pollution Degree 2 environment
- Overvoltage category: II
- Do not use it in the following environments.
  - Direct sunlight for a long time
    (Exposing the product to direct sunlight increases the surface temperature of the display higher than ambient temperature, and causes deterioration of LDC panel.)
  - Inflammable or corrosive gas.
  - Excessive airborne dust, metal particles or saline matter.
  - Benzine, paint thinner, alcohol or other organic solvents or strong alkaline solutions such as ammonia or caustic soda.
  - Direct vibration, shock or places always exposed to drop of water.
    (This unit is warranted by IP67 for panel mounting, however, this applies to initial values.)
  - Influence from power transmission lines, high voltage equipment, power cables, power equipment, radio transmitters, or any other equipment that would generate high switching surges. (100 mm or more)

Static electricity

- Do not touch connector pins directly to prevent static electricity from causing damage.
- Always rid yourself of any static electricity before handling this product.
- If excessive static electricity is applied to the panel surface, the LCD panel may be damaged.

Power supply

- Twist the wires of the power supply.
- The unit has sufficient noise immunity against the noise generated on the power line. However, it is recommended to take measures for reducing noise such as using an isolating transformer before supplying the power. And it is recommended to take measures such as installing a ferrite core.
- Allocate an independent wiring for each power supplying line, PLC etc and operating device.
- If using a power supply without a protective circuit, power should be supplied through a protective element such as fuse. Directly applying an abnormal voltage to the unit may cause the damage to the internal circuit.

3.1.2 Restriction According to Mounting Directions

If the unit is being installed in a horizontal orientation, or our Programmer II and C-NET adaptor are being connected to the TOOL port, note that the ambient usage temperature should be as below.

Model name	Condition	Ambient temperature
GT11	Vertically installed	0 to 45 °C
	Programmer II	
	C-NET adapter	
GT21	Horizontally installed	
	Programmer II	
	C-NET adapter	
GT32	Horizontally installed	0 to 40 °C
GT03-E GT32-E	Horizontally installed	-20 to 55 °C
	Vertically installed	

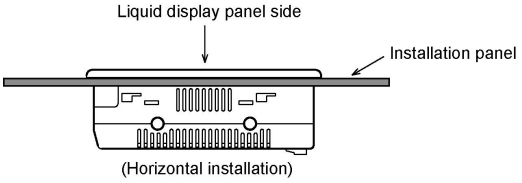

Note) When installing the unit aslant, the restriction is the same as the one when installing horizontally.

3.1.3 Installation Space

Applicable panel thickness

A panel with a thickness of 1.0 to 5.0 mm should be used.
Use a panel that is strong enough not to be warped.

Clearance when the GT is installed

When installing the GT unit, if other parts are being installed to the panel or cables are being wired to it, we recommend providing a clearance around the GT unit. This prevents cables from being damaged, and facilitates the installation work. Also, make sure that the slits in the main unit are never obstructed.

Model name	Clearance	Clearance on the surface to connect the screen transfer cable	Clearance on the mounting surface when using a SD memory card
GT01 GT11 GT21	30 mm or more (50 mm or more recommended)	20 mm	-
GT02L GT03M-3		60 mm	-
GT02 GT05 GT03T-E GT12 GT32 GT32-E		60 mm	40 mm or more

* It should be 40 mm or more when using a SD memory card.

3.1.4 UL/c-UL Qualification

Be aware of the following when applying for UL standard for the equipment that the GT has been built in.

- When the GT built in equipment, the GT should meet the standard as a part of the enclosure.
- As the rear of the GT is not qualified as an enclosure, provide a fire enclosure (metal barrier) that entirely covers the rear and lateral sides of the GT.

3.1.5 Mounting Screws

Secure the GT to a mounting plate using the fitting and screws provided with the unit.

Recommended screws

Recommended product	GT unit	Size	Others	Quantity
Mounting screw	GT01/GT11	M3 – 20	Material: SW pane-head (+) Galvanization, trivalent chromate	4 pcs/unit
	GT05/GT21/GT32/ GT32-E	M3 – 25		

GT02/GT02L/GT03-E/GT12 dedicated screw

The GT02/GT02L/GT03-E/GT12 dedicated screw is not sold on the open market.
Using screws other than the dedicated screw will cause failures such as decrease of water-proof property.

Name	Content	Model No.
Attachment fitting (with dedicated screws)	5 sets for GT02/GT02L/GT03-E/GT12 4 pcs of attachment fittings and 4 pcs of dedicated screws/set	AIG12830

3.1.6 GT01 and GT11 Installation Method

Secure the GT to the installation panel using the four fittings and four screws provided with the unit.

1. Place the GT in the installation panel.
2. Insert the fittings into the grooves provided in the GT, and tighten the screws to secure the GT to the installation panel.

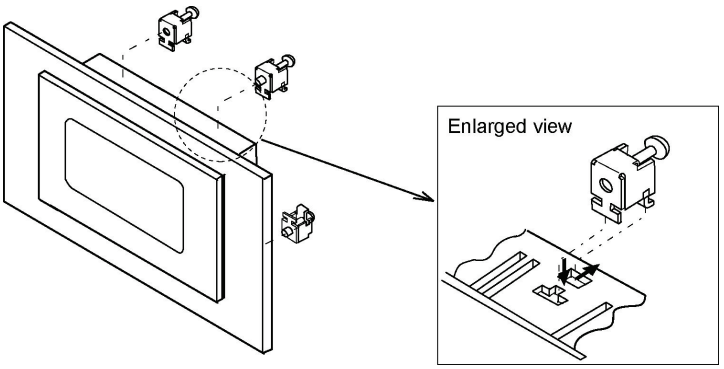

The screw tightening torque should be 0.1 to 0.25 N· m, and tighten them uniformly.
Tightening the screws too hard can cause deformation of the front panel, so that the touch switches will not function properly. Install the GT within the above range.

3.1.7 GT21 Installation Method

Secure the GT21 to the installation panel using the two fittings and four screws provided with the unit.

1. Place the GT21 main unit in the installation panel.
2. Insert the fittings into the grooves provided in the GT21 main unit, and tighten the screws to secure the GT21 main unit to the installation panel.

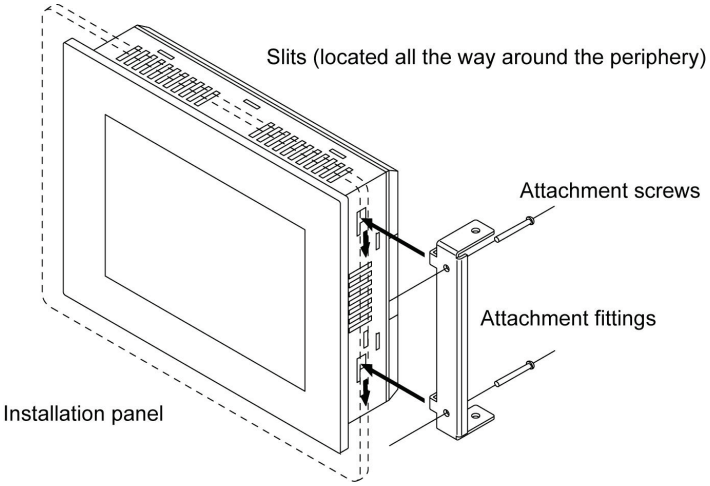

The screw tightening torque should be 0.1 to 0.25 N· m, and tighten them uniformly.
Tightening the screws too hard can cause deformation of the front panel, so that the touch switches will not function properly. Install the GT within the above range.

3.1.8 GT05/GT32/GT32-E Installation Method

Secure the GT32 to the installation panel using the two fittings and four screws provided with the unit.

1. Place the GT main unit in the installation panel.
2. Insert the fittings into the grooves provided in the GT main unit, and tighten the screws to secure the GT main unit to the installation panel.

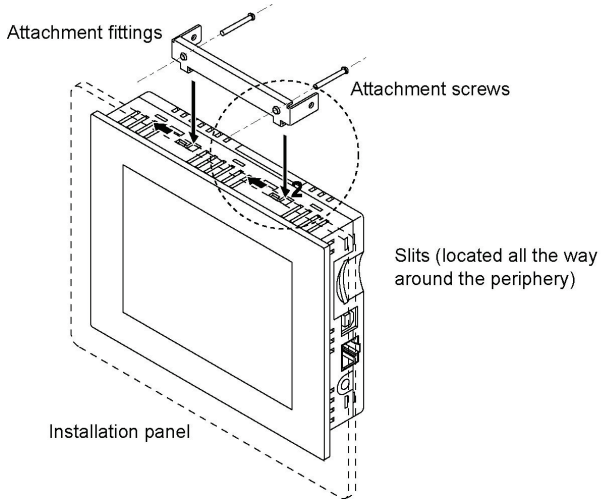

GT05 and GT32
The screw tightening torque should be 0.1 to 0.25 N· m, and tighten them uniformly.

GT32-E
The screw tightening torque should be 0.2 to 0.3 N· m, and tighten them uniformly.

Tightening the screws too hard can cause deformation of the front panel, so that the touch switches will not function properly. Install the GT within the above range.

3.1.9 GT02/GT02L/GT03-E/GT12 Installation Method

Secure the GT12 or GT02 to the installation panel using the two fittings and four dedicated screws provided with the unit.

1. Place the GT main unit in the installation panel.
2. Insert the fittings into the grooves provided in the GT main unit, and tighten the screws to secure the GT main unit to the installation panel.

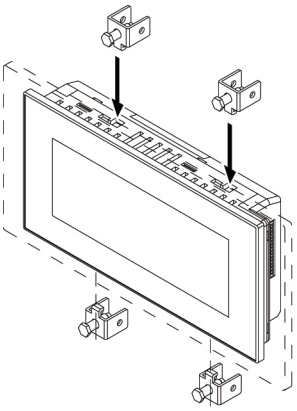

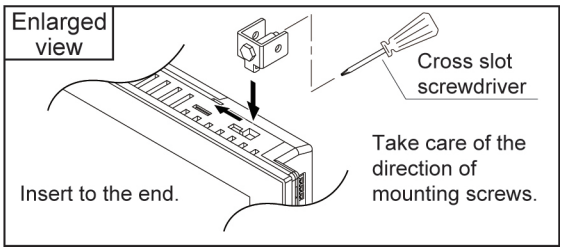

Note: - The cross slot screwdriver No. 1 must be used.
- Tightening torque: 0.2 to 0.3 N m
- Tightening the screws too hard can cause deformation of the front panel, so that the touch switches will not function properly.

3.1.10 Installing in Vertical Orientation

The normal orientation of GT series is horizontally long, however, they can be installed upright.

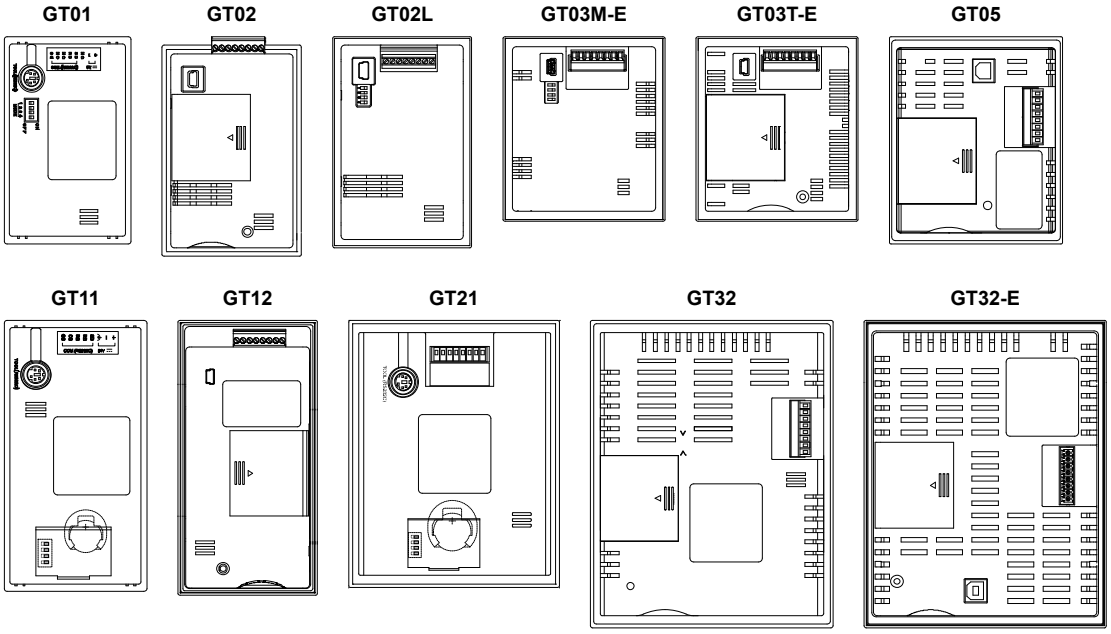

Key Point: Select the vertical type when selecting a GT model in GTWIN.

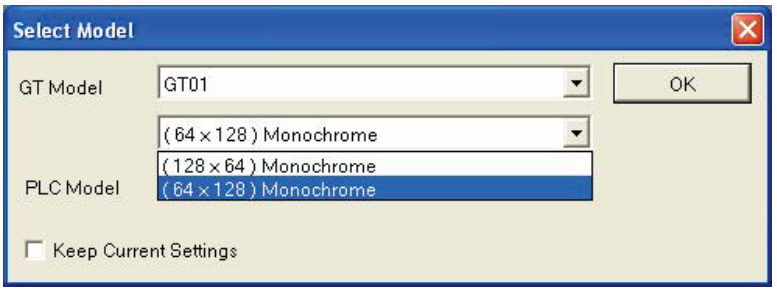

3.1.11 Precaution When reinstalling GT

When the GT is reinstalled after being removed from the panel, the water-proof packing should be replaced.

3.2 Wiring the Power Supply

3.2.1 Wiring the Power supply

The power supply should be wired by securely connecting the terminal on the rear of the main unit to the terminal.

Use twisted wiring for the power supply
In order to minimize influence from noise, the wiring for the power supply should be twisted.

Insulate the power supply inside a protective circuit
- In order to protect the unit against abnormal voltage from the power supply line, the power supply should be an insulated type, and should be enclosed within a protective circuit.
- If a power supply device without an internal protective circuit is being used, power should always be supplied to the GT series through a fuse or a similar protective device.

Keep the power supply voltage within the operating voltage range

Rated voltage	Operating voltage range
5 V DC	4.5 to 5.5 V DC
24 V DC	21.6 to 26.4 V DC

Keep the power supply wiring separate
- Wiring to the GT series, PLC, and other power equipment should have separate wiring systems.

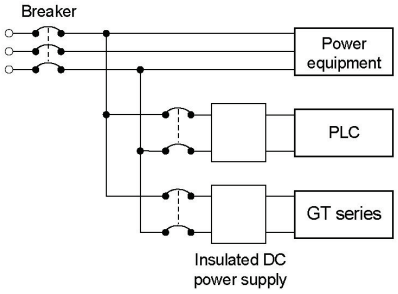

3.2.2 Grounding

Be sure to ground when the influence of noise is great

The unit is tolerant against noise in normal environments, but if the environment is particularly susceptible to noise, please ground.

Use dedicated grounding

- Make the grounding point as close as possible to the GT and keep the distance of the grounding wire short.
- Sharing the ground with another device may have an adverse effect. Therefore, be sure that grounding is dedicated.

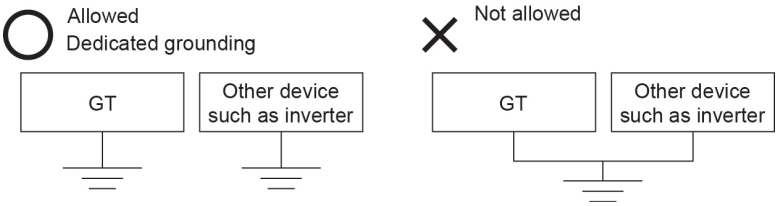

Note:

Conversely, depending on your environment, grounding may cause a problem.

Example:

Since the power line of the GT unit is connected to a functional earth via electronic parts, the electronic parts may become damaged if there is an abnormal potential between the power line and the physical ground.

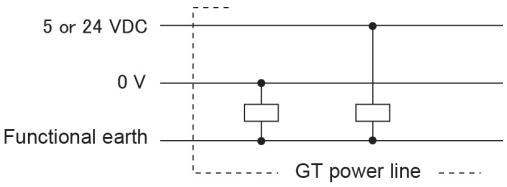

Do not ground the function earth when grounding a plus (+) terminal of the power. (GT01, Gt11, GT21)

In some computers, the SG terminal of RS232C port and connector shielding are connected. Also the tool port shielding is connected with the function earth terminal. Therefore, the GND terminal and the function earth terminal are connected if the computer is connected. Especially when the GT is connected to a computer with a plus (+) terminal grounded, therefore, an GT's minus (-) terminal is connected with the function earth terminal. As a result, short circuit occurs which may lead to the breakage of GT and its neighboring parts.

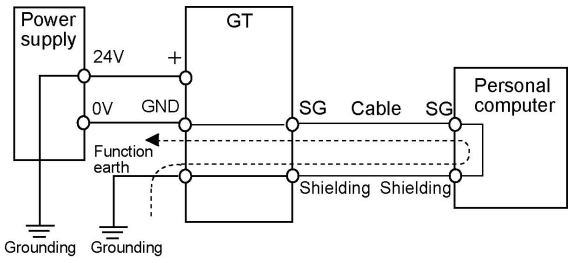

3.3 Wiring the COM Port

Accessory communication connector/applicable wiring

The communication connector used for the COM port (provided as an accessory with the main unit) has a screw-tightening type of terminal block. The wiring shown below should be used.

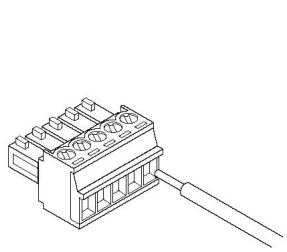

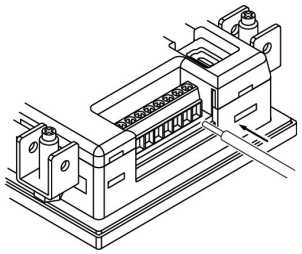

Applicable wiring (twisted wiring)

Size	Conductor cross-section surface area
AWG 28 to 16	0.08 to 1.25 mm^2

Use a special tool to tighten the terminal block of the communication connector.

Using a screwdriver made by us. (Product number: AFP0806). The tightening torque should be 0.22 to 0.3 N· m or less.

When doing RS485 communication using RS422 type

Please use the following cables or equivalent.

Appropriate electrical cables (twisted cables)

Type	Cross-sectional view	Conductor		Insulator		Cable diam.	Sample appropriate cable
		Size	Resist-ance (at 20°C)	Material	Thick-ness		
Shielded twisted pair	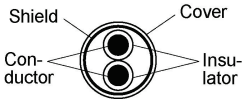	1.25 mm^2 (AWG16) or greater	Max. 16.8 Ω/km	Polye-thylene	Max. 0.5 mm	Approx. 8.5 mm	Belden 9860 Hitachi Cable, Ltd. KPEV-S1.25 mm^2 x 1P
		0.5 mm^2 (AWG20) or greater	Max. 33.4 Ω/km	Polye-thylene	Max. 0.5 mm	Approx. 7.8 mm	Belden 9207 Hitachi Cable, Ltd. KPEV-S0.5 mm^2 x 1P

Note:

- Use shielded twisted pair cables.
- Use only one type of transmission cable. Do not mix more than 1 type.
- When using shielded cable with crossover wiring for the RS485 transmission line, grounded one end.

Wiring method

(1) Remove the sheath from the wire.

(2) Insert the wire all the way into the terminal block, and tighten the screw in the clockwise direction to secure it.

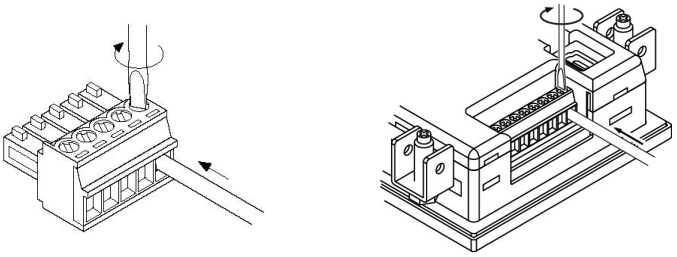

Precautions concerning wiring

The following precautions should be observed, to avoid broken or disconnected wires.

- When removing the sheath, be careful not to scratch the core wire.
- Wire the terminal without twisting the core wire.
- The core wire should be connected without soldering it. Vibration can sometimes cause soldered connections to break loose.
- After connecting the wiring, avoid subjecting the cable to stress.
- Because of the construction of the terminal, tightening the wire in the counterclockwise direction will cause a faulty connection. If this happens, disconnect the wire, check the terminal hole, and connect the wire again.

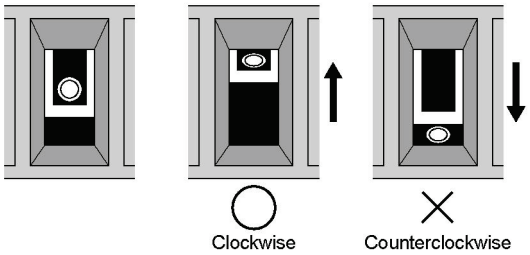

Reference:

For information on connecting the COM port of the GT series with various PLC units, refer to <Chapter 4 Connecting with the PLC>.

3.4 Precautions when Wiring COM Port

Precautions are different depending on communication conditions. Arrange wirings according to the following instructions.

3.4.1 GT01 (5 V DC)

RS232C type

- Perform wiring and placement of the cable so that there is no impression of external noise on the cable and no induction.
- Use shielded wires for distribution cables.
  (Recommended cable: AIGT8142 with one ferrite core)
- It conforms to CE marking. As conditions, the following wiring is required.
  1. Make the cable do three turns around a ferrite core.
     (Recommended ferrite core: Seiwa Electric's E04RA190120080 or equivalent)
  2. Perform grounding of the cable shield.
     * Packaged with AIGT8142.

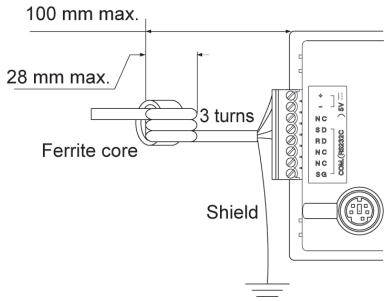

RS422 (RS485) type

- There is no RS and CS (control lines).
- Perform wiring and placement of the cable so that there is no impression of external noise on the cable and no induction.
- Use shielded wires for distribution cables.
  (Recommended cable: AIGT8152 with one ferrite core(Seiwa Electric's E04RA190120080))
- When using shielded cable with crossover wiring for the RS485 transmission line, grounded one end.
- "E" is used to set the terminating station.
- It does not conform to European EMC directive.

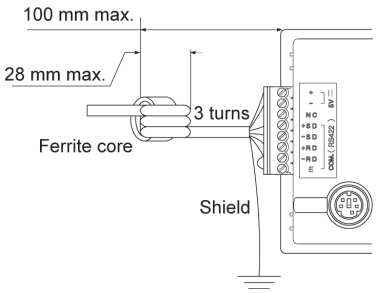

Key Point:

The CE marking standards that the GT01 conforms to (excluding the RS422 (RS485) type)
European EMC directive 2004/108/EC
European EMC standards (EN61000-6-4 and EN61000-6-2)

3.4.2 GT02/GT02L (5 V DC)

RS232C type

- Perform wiring and placement of the cable so that there is no impression of external noise on the cable and no induction.
- Use shielded wires for distribution cables.
  (Recommended cable: AIGT8142)
- It conforms to CE marking. As conditions, the following wiring is required.
  1. Perform grounding of the cable shield.
  2. Perform grounding of the GT.

GT02

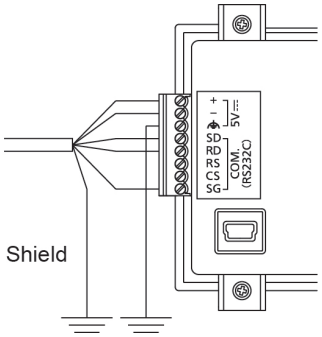

GT02L

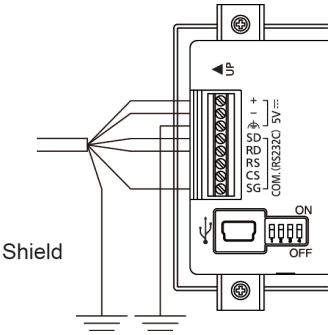

RS422 (RS485) type

- There is no RS and CS (control lines).
- Perform wiring and placement of the cable so that there is no impression of external noise on the cable and no induction.
- Use shielded wires for distribution cables.
- When using shielded cable with crossover wiring for the RS485 transmission line, grounded one end.
- "E" is used to set the terminating station.
- It conforms to CE marking. As conditions, the following wiring is required.
  1. Perform grounding of the cable shield.
  2. Perform grounding of the GT.

GT02

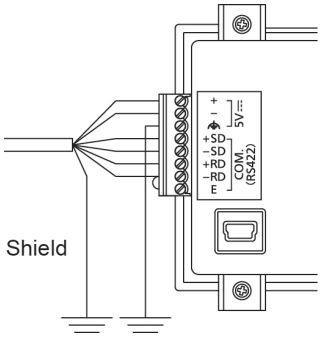

GT02L

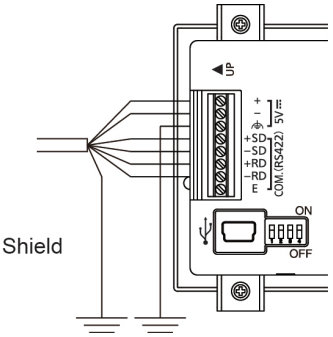

Key Point:

The CE marking standards that the GT02/GT02L conforms to
European EMC directive 2004/108/EC
European EMC standards (EN61131-2)

3.4.3 RS232C Communication

- There is no RS and CS (control lines) for GT01.
- Perform wiring and placement of the cable so that there is no impression of external noise on the cable and no induction.
- Use shielded wires for distribution cables. (Recommended cable: AIGT8162)
- It conforms to CE marking. As conditions, the following wiring is required.
    1. Install a ferrite core to the cable. (For GT11 only)
       (Recommended ferrite core: Seiwa Electric's E04SR170730A or equivalent)
    2. Perform grounding of the cable shield.
    3. Perform grounding of the GT.

GT01/GT02/GT12

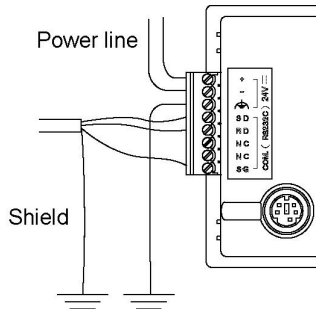

GT11

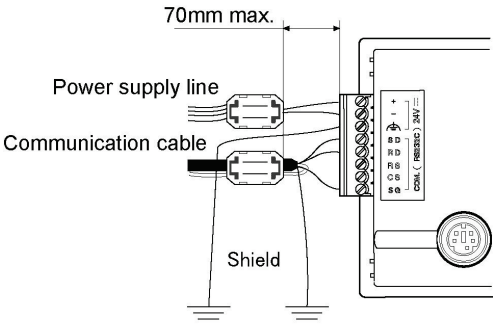

Installing Ferrite core

GT03-E/GT21

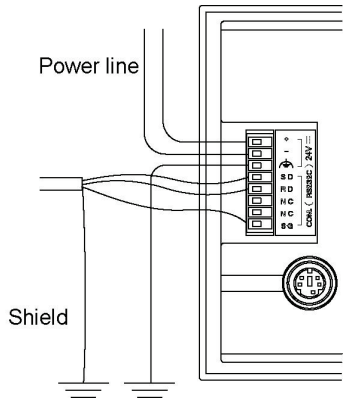

GT05/GT32/GT32-E

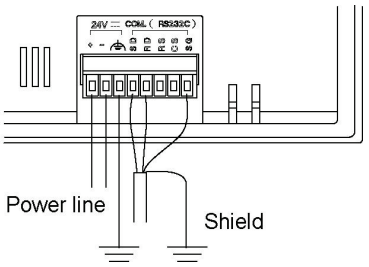

Key Point:

The CE marking standards that the GT series conforms to

European EMC directive 2004/108/EC

European EMC standards For GT01, GT11, GT21 (EN61000-6-4 and EN61000-6-2)

For GT02, GT03-E, GT05, GT12, GT32, GT32-E (EN61131-2)

3.4.4 RS422 (RS485) Communication

- There is no RS and CS (control lines).
- Perform wiring and placement of the cable so that there is no impression of external noise on the cable and no induction.
- Use shielded wires for distribution cables. (Recommended cable: AIGT8175 (for Mitsubishi FX series)
- When using shielded cable with crossover wiring for the RS485 transmission line, grounded one end.
- “E” is used to set the terminal unit.
- It conforms to CE marking. As conditions, the following wiring is required.
    1. Fit a ferrite core to the cable. (For GT11 only)
       (Recommended ferrite core: Seiwa Electric’s E04SR170730A or equivalent)
    2. Perform grounding of the cable shield.
    3. Perform grounding of the GT.

GT01/GT02/GT12

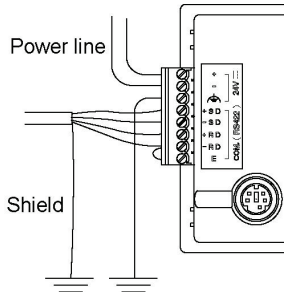

GT11

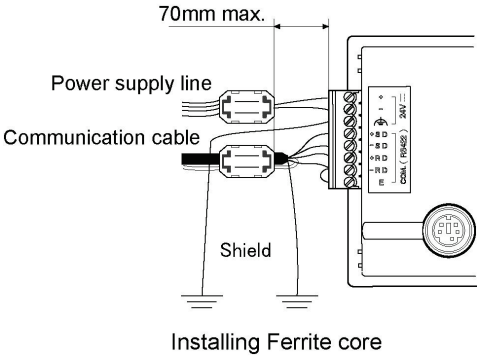

GT03-E/GT21

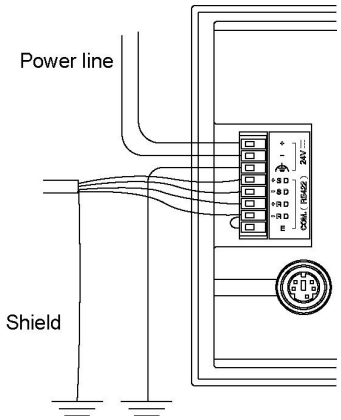

GT05/GT32/GT32-E

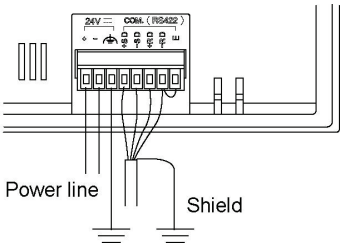

Key Point:

The CE marking standards that the GT series conforms to

European EMC directive 2004/108/EC

European EMC standards For GT01, GT11, GT21 (EN61000-6-4 and EN61000-6-2)

For GT02, GT03-E, GT05, GT12, GT32, GT32-E (EN61131-2)

3.5 Precautions when Wiring Ethernet Port (GT32T1)

- Although more than one GT32T1 can be connected using a hub, communication is performed with one unit each. Specify each destination to communicate.
- Use a UTP cable (unshielded cable) for the Ethernet cable, and take measures for noises such as installing a ferrite core if necessary.
- It conforms to CE marking. As conditions, the following wiring is required.
  1. Do not use a shield wire for the Ethernet cable.
  2. Install a ferrite core to the Ethernet cable and make one turn.
     (Recommended ferrite core: Kitagawa Industries SFC-10 or equivalent)

GT32T1

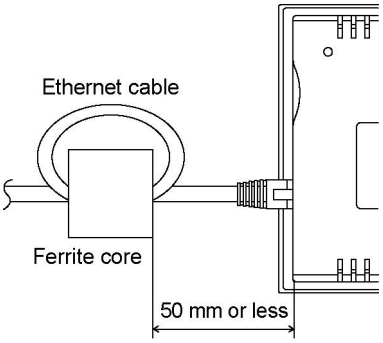

Key Point:

The CE marking standards that the GT32 conforms to
European EMC directive 2004/108/EC
European EMC standards (EN61131-2)

3.6 Options

3.6.1 Backup Battery

Backup battery

The internal data in the GT can be backed up using the backup battery.
Use the following backup batteries.

GT model	Battery type	Product No.
GT11	Button type lithium battery	CR2032 (commercial item)
GT21		
GT02M2,GT02G2	Backup battery	AFPX-BATT (The backup battery for the FP-X is used.)
GT03T-E		
GT05		
GT12		
GT32		
GT32-E		

Battery life

Battery life, when operating at a normal temperature (25°C), a normal humidity (65% RH), is as follows.

GT model	life
GT11	Approx. 2 years
GT21	
GT03T-E	Approx. 3 years
GT05S	
GT32T0, GT32T1	
GT32-E	
GT02M2,GT02G2	Approx. 5 years
GT05M	
GT05G	
GT12	
GT32M	

Backup

The internal data of the GT is backed up in the following ways.

Internal data to be backed up	Stored in	Backup battery
Screen data (base, keyboard, login) **Flow display data** **Recipe data** **Write device** **FP monitor screen data**	Stored in the F-ROM.	Not required
Alarm history + Line graph sampling **Logging data of Logging function** **Hold GT device** **Hold PLC device**	Stored in the SRAM.	Required

Note:

When using a backup battery, attach the battery before the power supply is turned on.

3.6.2 How to Install the Battery (Lithium Button Battery)

(The figures below is explained using the GT11.

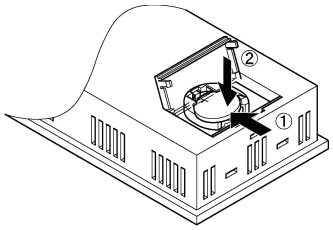

When installing the battery

①Insert the head of the battery in the battery holder, and push it into the back.

②Press the battery down pushing it into the back of the battery holder.

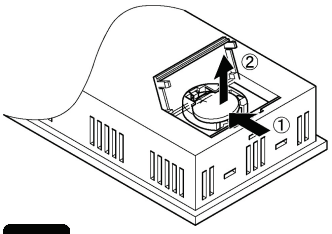

When removing the battery

①Push the battery into the back of the holder.

②Pull up the battery pushing it into the back of the battery holder.

Note: Do not touch the electronic parts when removing and installing the battery.

3.6.3 How to Install the Battery (Backup Battery)

The figures below is explained using the GT32.

1. Remove the battery cover.

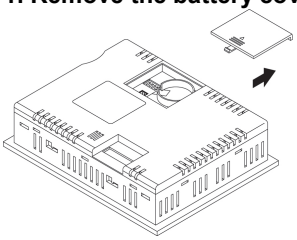

2. Connect the connector to make the red line be the (+) side, and place a battery in the circular frame.

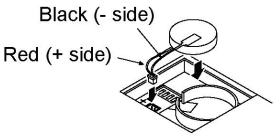

Position where the connector is connected

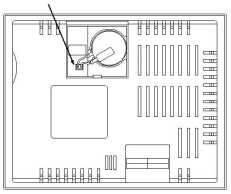

Overhead view

3. Fit the battery cover.

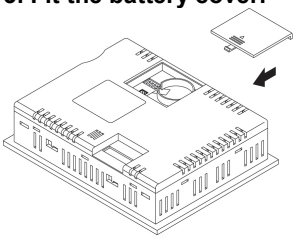

3.6.4 Dead Battery Mark

If the battery voltage drops too low, the battery mark is displayed at the bottom right of the GT screen.

When the battery voltage drops

It can be specified in the GTWIN configuration settings, whether or not the dead battery mark is displayed .

Note:
If the battery voltage drops too low, the BAT LOW flag of the basic communication area map goes on. If the battery has run down completely, the BAT flag of the basic communication area map goes on. Please be aware that the BAT flag goes on the first time that the power supply is turned on after the unit is purchased.

* The BAT and BAT LOW flags in the basic communication area map activate in the both cases that the battery error display is set to “On” and “Off”.

3.6.5 Time for Replacement of Battery

When replacing the backup battery, turn on electricity for the time for energization, and replace the battery with a new one within one minute after turning off the power supply.
If the battery is not replaced within the time for replacement, the saved data will be lost.

Time for energization	Time for replacement
1 min. or more (10 min. or more for GT32)	Within 1 min.

3.6.6 Replacement of Front Panel Protective Sheet

About the front panel protective sheet
Use the separately-sold protective sheets to protect the touch panel surface and to keep it clean.

Replacing the front panel protective sheet (For GT01 (except GT01R) and GT11)
Follow the steps below to replace the sheet:

1. Peel off the seal from the provided protector sheet and attach it to the unit.
Take out one of the replacement front panel protective sheets and peel off the seal with the shiny side. When attaching the sheet, align the adhesive edges with the front of the GT. Finish by peeling off the thin film attached to the top of the front panel protective sheet.

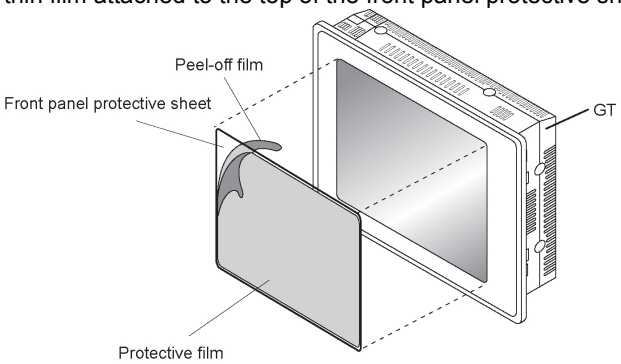

Replacing the front panel protective sheet
(For GT01R, GT02, GT02L, GT03-E, GT12, GT21, GT32 and GT32-E)

1. Remove the peel-off film attached to the front panel protective sheet.

2. Attach the front panel protective sheet.
Attach the front sheet to fit the liquid crystal part of GT. At this time, try not to allow the air to get in the attached face. If the air was in, remove the air to be out with fingers. Do not press the front panel hard as it may cause the damage to the touch switch.

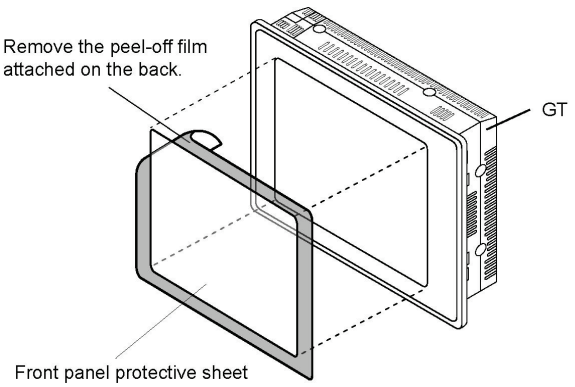

3.6.7 About the Waterproof Packing

If the panel is being detached from the GT and then reattached, the waterproof packing should be replaced, in order to assure that the panel remains waterproof (IP65, however, IP67 for GT02, GT03-E, GT12 and GT32-E).

Replacing the waterproof packing

1. Remove the currently attached waterproof packing.
Remove the attached waterproof packing from the GT.

2. Attach the provided waterproof packing.
Take out one of the replacement waterproof packing pieces and attach the outer edge as shown in the illustration (do not use the inner edge).
When doing this, fasten it to the front frame, being sure not to twist the waterproof packing.
As for the model with a grooved front frame, surely fit the waterproof packing in the groove.

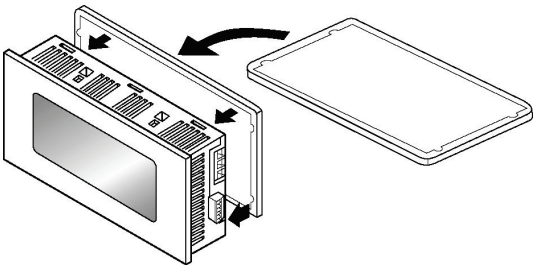

Chapter 4

Connecting with PLC

4.1 Connection with PLC

How to connect with PLC

- **Connecting between one GT and one PLC via 1:1 communication**
- **Connecting between one GT and multiple PLCs via 1:N communication (PLC multiple connection)**
- **Connecting between one PLC and multiple GTs via 1:N communication (GT link)**
- **Connecting using the general-purpose serial communication mode**
- **As for the 5 V DC-type GT01, power can be supplied with a communication cable only.**

4.1.1 PLC Multiple Connection

PLC multiple connection function is a function that enables more than one PLCs to connect with one GT.

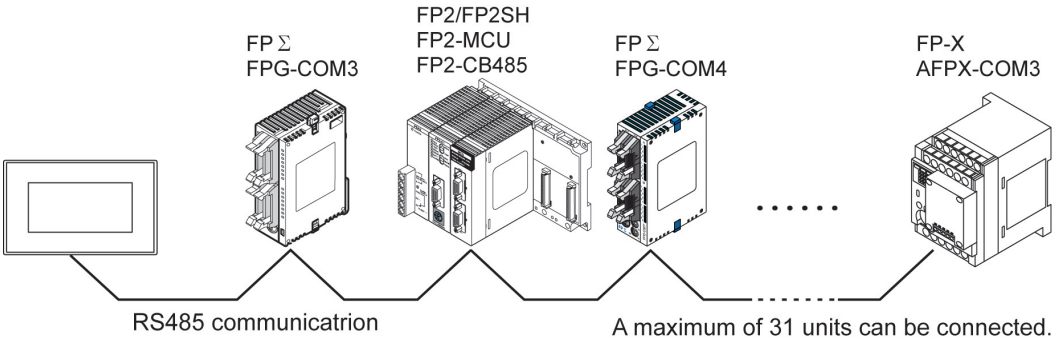

4.1.2 GT Link Connection

GT link function is a function that enables more than one GT to connect with one PLC.

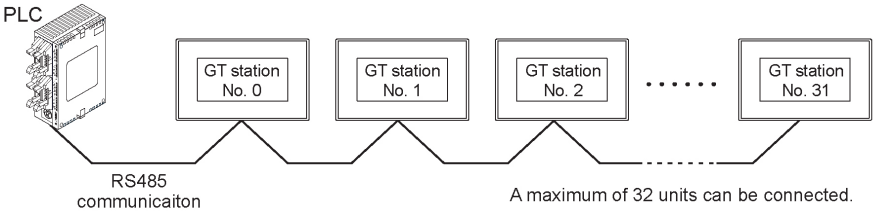

Wiring of Power Supply

It takes more than 5 seconds for all GT units to be operable after turning on the power supply of GT.
(The time varies according to conditions and the number of connected GT units.)

As for the power supply of GT, it is recommended to use the wiring that enables multiple GT units to be simultaneously turned on.

If the power supplies of multiple GT units cannot be simultaneously turned on after turning on the power supply of devices such as a PLC, an error message will be displayed and it may take some time to make communication to be established.
(The error display disappears when all the GT units become operable.)

4.1.3 Connecting to the PLCs made by Other Companies

For information on the connection with PLCs manufactured by other companies, see the latest GTWIN HELP or our website (http://industrial.panasonic.com/ac/e/dl_center/manual) where you can get the manual.

Reference: < Connection with Other Companies' PLCs Manual ARCT1F449E>

4.1.4 Connecting to a Serial Device

Devices other than PLCs can be connected by using the general-purpose serial communication mode of the GT. Also, PLCs made by other companies which are not put on our website can be used. See our website or the GT series General-purpose serial communication manual.

Reference: <GT Series General-purpose Serial Communication Manual ARCT1F356E>

4.1.5 Electric Supply from PLC (5 V DC-type)

The power can be supplied to the 5V DC-type with the communication cable only. The power supply is not required separately. However, it is available only when it is connected with the TOOL port.

Restriction on the capacity of the power supply depending on the PLC model to be used
The number of PLC units that can be expanded is limited.

PLC model	Restrictions when connecting a 5 V DC-type
FP-X	The number of units which can be expanded depends on the unit type.
FP0	Maximum of two expansion units *
FPΣ	Maximum of six expansion units *
FP2	The method for calculating the number of units that can be expanded is provided in the manual. Follow that formula and keep the GT01's power consumption not higher than 200 mA when calculating.
FP2SH	
FP-e/FP0R	There are no particular restrictions.
FX series made by Mitsubishi Electric Co.	The restrictions are equivalent to the restrictions on the programmable display F920 (5 V power supply type) made by Mitsubishi. Use the FX series according to the use conditions for the F920 (5 V power supply type).

* Expansion is possible with the number of units given above, regardless of the type of unit.

4.2 RS232C Connection

4.2.1 Difference of Terminal blocks Between GT Models

Although the terminal blocks vary according to the GT models, the connection method is the same.
The connection diagram for 24 V DC is described with the terminal blocks other than the one for GT01.

24 V DC type other than GT01

GT side (24V DC RS232C)

Pin name	Signal
+	+24V
-	0V
FG	FG
SD	SD
RD	RD
RS	NC
CS	NC
SG	SG

24 V DC-type GT01

GT side (GT01, 24V DC RS232C)

Pin name	Signal
+	+24V
−	0V
NC	NC
SD	SD
RD	RD
NC	NC
NC	NC
SG	SG

5 V DC-type GT01

GT side (5V DC RS232C)

Pin name	Signal
+	+5V
−	0V
NC	NC
SD	SD
RD	RD
NC	NC
NC	NC
SG	SG

5 V DC-type GT02/GT02L

GT side (5V DC RS232C)

Pin name	Signal
+	+5V
-	0V
FG	FG
SD	SD
RD	RD
RS	NC
CS	NC
SG	SG

4.2.2 RS232C Connection with PLC Tool Port

Connecting with 5 V DC type

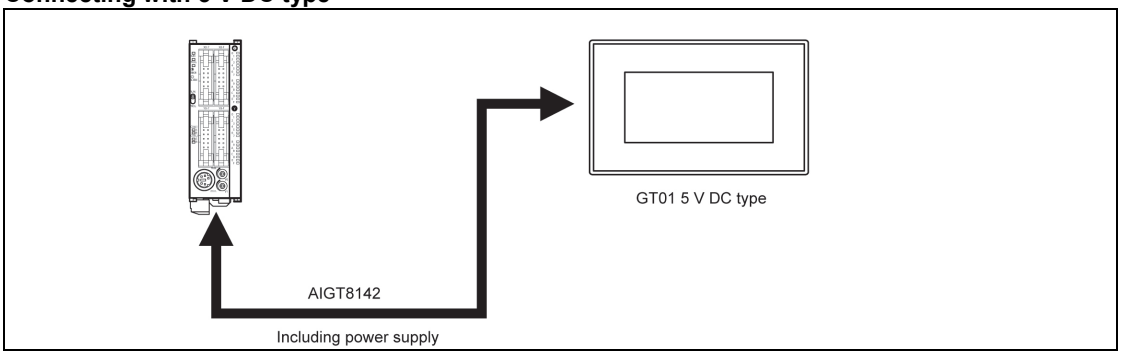

Usable models

PLC	PLC communication cable		Programmable display	
FP-X FPΣ FP0/FP0R FP-e FP2/FP2SH	Mini-DIN 5-pin loose-wire cable	AIGT8142	5 V DC type	RS232C type

Connecting to the TOOL port

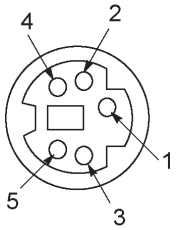

PLC side

Pin No.	Signal	Cable color
1	SG	Brown
2	SD	Red
3	RD	Orange
4	-	-
5	+5V	White
-	SHELL	Black

5V DC type GT01
GT side (5V DC RS232C)

Pin name	Signal name
+	+5V
−	0V
NC	NC
SD	SD
RD	RD
NC	NC
NC	NC
SG	SG

PLC side

Pin No.	Signal	Cable color
1	SG	Brown
2	SD	Red
3	RD	Orange
4	-	-
5	+5V	White
-	SHELL	Black

5V DC type GT02/GT02L
GT side (5V DC RS232C)

Pin name	Signal name
+	+5V
−	0V
NC	NC
SD	SD
RD	RD
NC	NC
NC	NC
SG	SG

Note: Connecting to the COM port is not available.

- Keep the cable no longer than 3 m.
- In case of connecting to PLC with all expansion slots used, prepare an external 5 V DC power supply for the GT01 due to current consumption limits.
- When using the FP2/FP2SH, check whether or not the power can be supplied from the TOOL port according to the calculation method of the number of expansion units described in the hardware manual.

Connecting with 24 V DC type

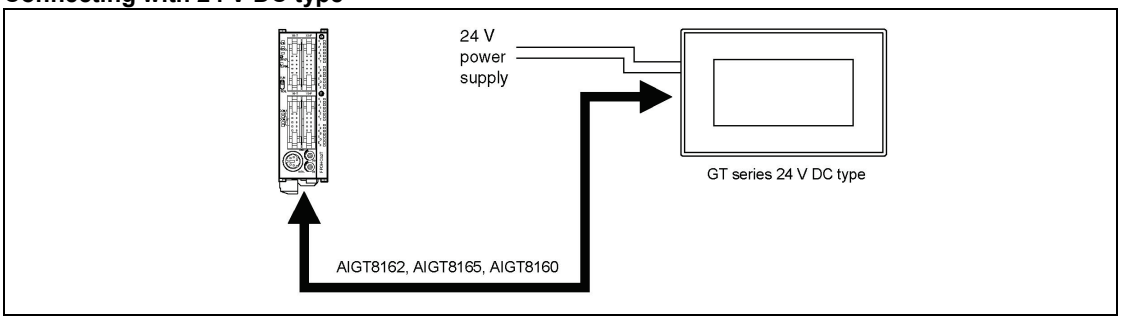

Usable models

PLC	PLC communication cable		Programmable display	
FP-X FPΣ FP0/FP0R FP-e FP2/FP2SH	Mini-DIN 5-pin loose-wire cable	AIGT8162 AIGT8165 AIGT8160	24 V DC	RS232C type

Connecting to the TOOL port

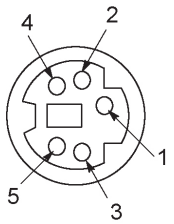

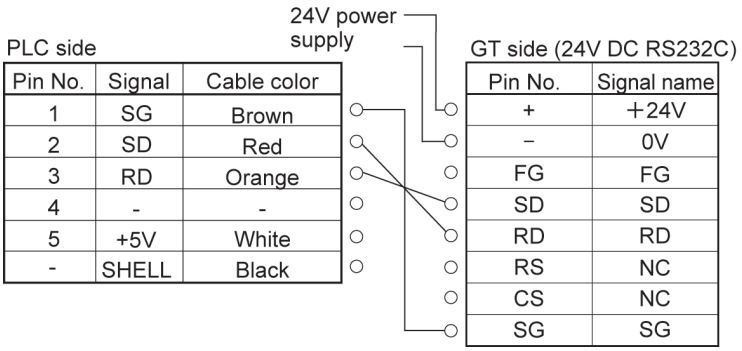

Pin No.	Signal	Cable color
1	SG	Brown
2	SD	Red
3	RD	Orange
4	-	-
5	+5V	White
-	SHELL	Black

Pin No.	Signal name
+	+24V
−	0V
FG	FG
SD	SD
RD	RD
RS	NC
CS	NC
SG	SG

4.2.3 RS232C Connection with FP-X COM Port

Connecting to the COM port of FP-X Communication cassette

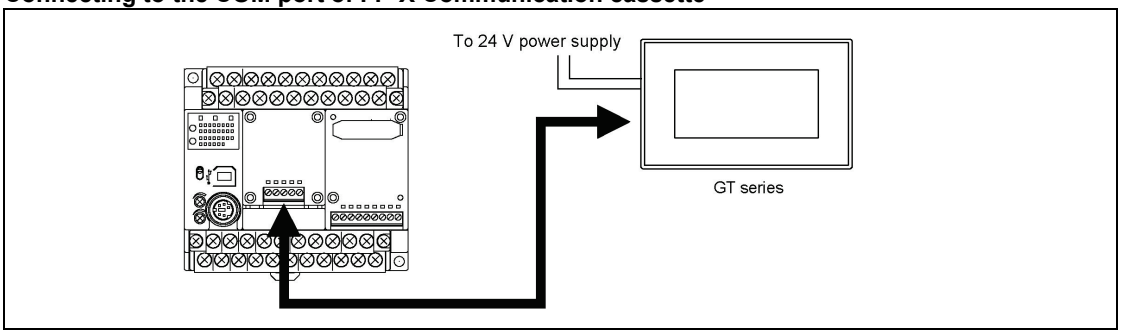

Usable models

PLC		PLC communication cable	Programmable display	
FP-X	AFPX-COM1	Loose-wire cable	5 V DC 24 V DC	RS232C type
	AFPX-COM2			
	AFPX-COM3			
	AFPX-COM4			
	AFPX-COM5			

Connecting to the 1- channel type RS232C

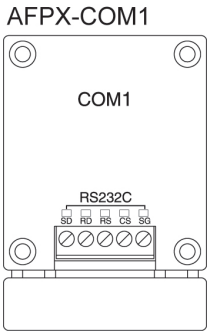

To power supply

PLC side

Pin name	Signal
SD	SD
RD	RD
RS	RS
CS	CS
SG	SG

GT side (24V DC RS232C)

Pin name	Signal
+	+24V
-	0V
FG	FG
SD	SD
RD	RD
RS	NC
CS	NC
SG	SG

Connecting to the 2-channel type RS232C

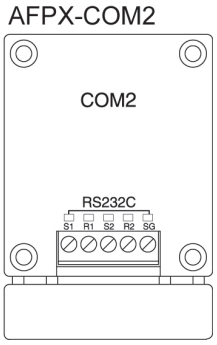

To power supply

PLC side

Pin name	Signal name
S1	SD
R1	RD
S2	SD
R2	RD
SG	SG

GT side (24V DC RS232C)

Pin name	Signal
+	+24V
-	0V
FG	FG
SD	SD
RD	RD
RS	NC
CS	NC
SG	SG

As for the connection to S2 and R2 for COM2, make the same connection as S1 and S2.

Connecting to the 1-channel type RS485 and 1-channel type RS232C

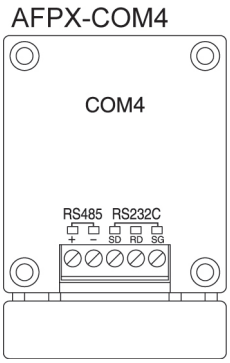

To power supply

PLC side

Pin name	Signal
S+	+
S-	-
SD	SD
RD	RD
SG	SG

GT side (24V DC RS232C)

Pin name	Signal
+	+24V
-	0V
FG	FG
SD	SD
RD	RD
RS	NC
CS	NC
SG	SG

Connecting to the 1-channel type Ethernet and 1-channel type RS232C

It cannot be connected with Ethernet.

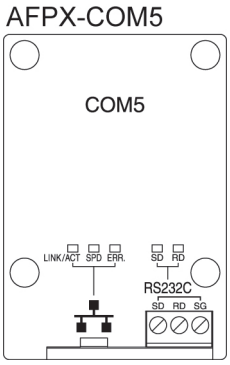

To power supply

PLC side

Pin name	Signal
SD	SD
RD	RD
SG	SG

GT side (24V DC RS232C)

Pin name	Signal
+	+24V
-	0V
FG	FG
SD	SD
RD	RD
RS	NC
CS	NC
SG	SG

4.2.4 RS232C Connection with FPΣ COM Port

Connecting to the COM port

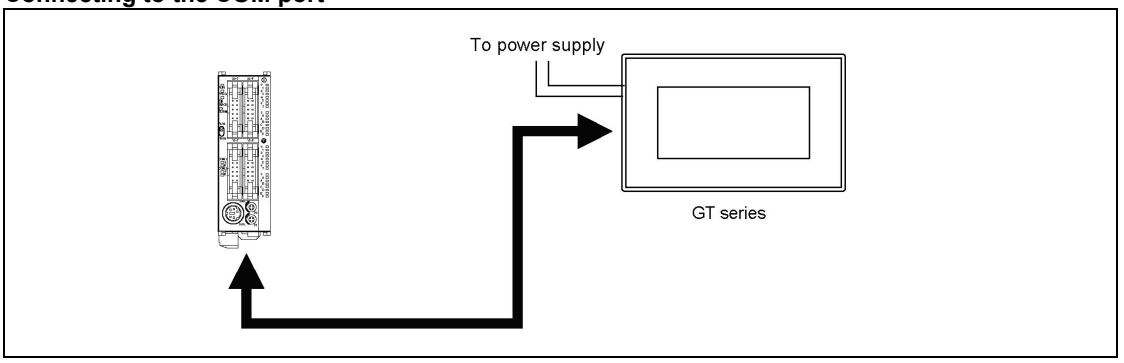

Usable models

PLC	PLC communication cable	Programmable display	
FPΣ	Loose-wire cable	5 V DC 24 V DC	RS232C type

Connecting to the 1-channel type RS232C

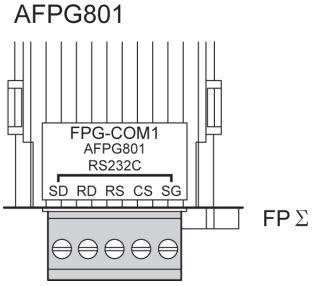

To power supply

PLC side

Pin name	Signal
SD	SD
RD	RD
RS	RS
CS	CS
SG	SG

GT side (24V DC RS232C)

Pin name	Signal
+	+24V
-	0V
FG	FG
SD	SD
RD	RD
RS	NC
CS	NC
SG	SG

Connecting to the 2-channel type RS232C

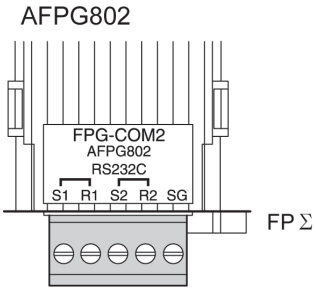

To power supply

PLC side

Pin name	Signal name
S1	SD
R1	RD
S2	SD
R2	RD
SG	SG

GT side (24V DC RS232C)

Pin name	Signal
+	+24V
-	0V
FG	FG
SD	SD
RD	RD
RS	NC
CS	NC
SG	SG

As for the connection to S2 and R2 for COM2, make the same connection as S1 and S2.

Connecting to the 1-channel type RS485 and 1-channel type RS232C

The connections with either one unit or two units are available.

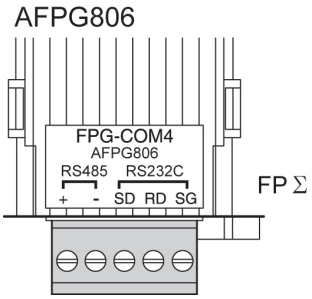

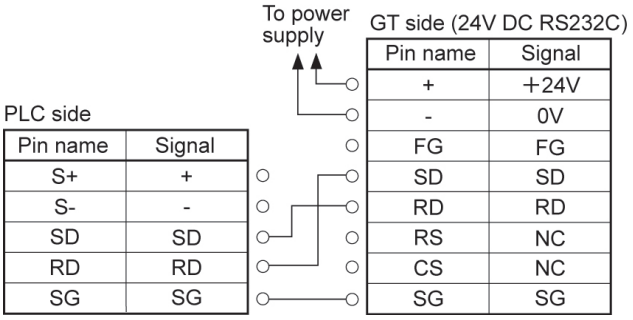

Pin name	Signal
S+	+
S-	-
SD	SD
RD	RD
SG	SG

Pin name	Signal
+	+24V
-	0V
FG	FG
SD	SD
RD	RD
RS	NC
CS	NC
SG	SG

4.2.5 RS232C Connection with FP0/FP0R COM Port

Connecting to the COM port

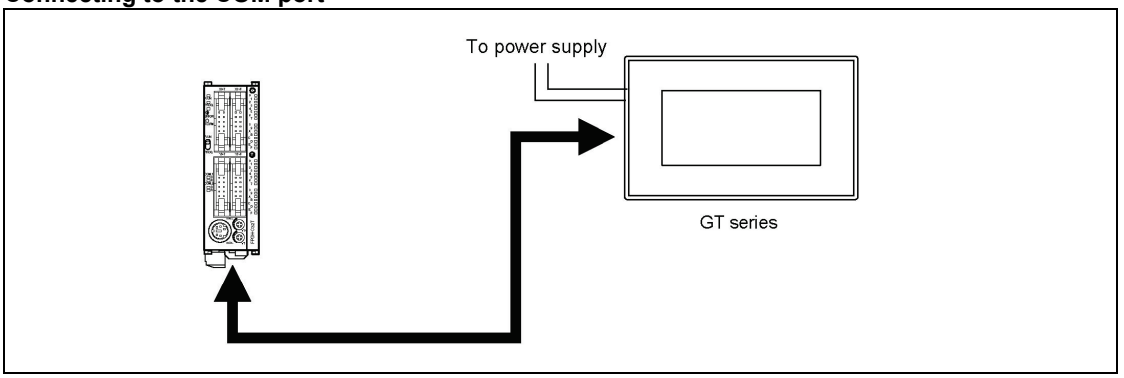

Usable models

PLC	PLC communication cable	Programmable display	
FP0 FP0R	RS232C type	5 V DC 24 V DC	RS232C type

Connecting to the COM port of FP0/FP0R

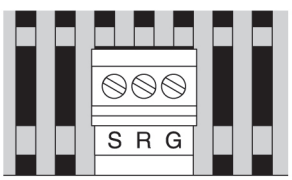

FP0/FP0R

PLC side

Pin name	Signal
S	SD
R	RD
G	SG

To power supply

GT side (24V DC RS232C)

Pin name	Signal
+	+24V
-	0V
FG	FG
SD	SD
RD	RD
RS	NC
CS	NC
SG	SG

4.2.6 RS232C Connection with FP-e COM Port

Connecting to the COM port

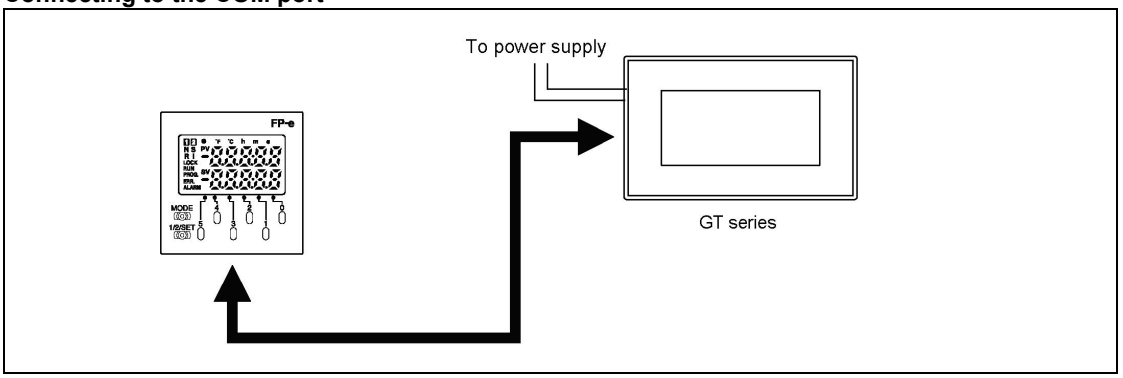

Usable models

PLC	PLC communication cable	Programmable display	
FP-e	Loose-wire cable	5 V DC 24 V DC	RS232C type

Connecting to the FP-e (RS232C)

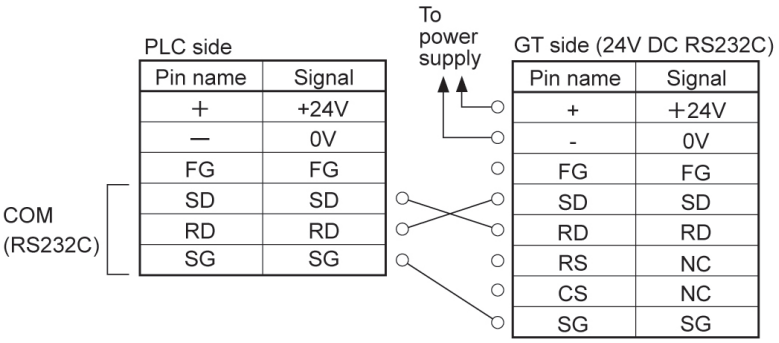

4.2.7 RS232C Connection with FP2/FP2SH COM Port

Connecting to the COM port

FP2/FP2SH CPU unit

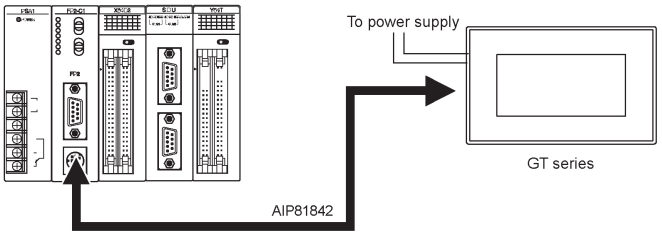

FP2 Computer Communication Unit

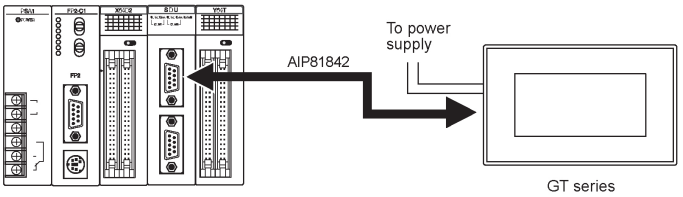

FP2 Multi Communication Unit

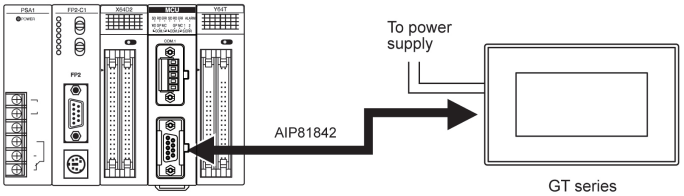

Usable models

PLC		PLC communication cable		Programmable display	
FP2/FP2CH CPU unit		D-SUB 9-pin loose-wire cable	AIP81842	5 V DC 24 V DC	RS232C type
FP2 Computer Communication Unit					
FP2 Multi Communication Unit	Communication block FP2-CB232				

Connecting to the TOOL port

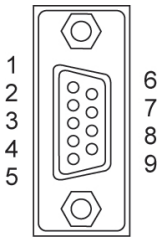

PLC side

Pin No.	Signal	Cable color (Dot mark)
1	FG	Brown (Black dot)
2	SD	Brown (Red dot)
3	RD	Yellow (Black dot)
4	RS	Yellow (Red dot)
5	CS	Green (Black dot)
6	N.C.	-
7	SG	Green (Red dot)
8	N.C.	-
9	ER	-

To power supply

GT side (24V DC RS232C)

Pin name	Signal
+	+24V
-	0V
FG	FG
SD	SD
RD	RD
RS	NC
CS	NC
SG	SG

4.3 RS422 Connection

4.3.1 Difference of Terminal blocks Between GT Models

Although the terminal blocks vary between the 5 V DC type and 24 V DC type, the connection method is the same.
The connection diagram is described with the terminal block for 24 V DC.

24 V DC type

GT side (24V DC RS422/485)

Pin name	Signal
+	＋24V
−	0V
FG	FG
+SD	+SD
-SD	-SD
+RD	+RD
-RD	-RD
E	E

5 V DC-type GT01

GT side (5V DC RS422/485)

Pin name	Signal
+	＋5V
−	0V
NC	NC
+SD	+SD
-SD	-SD
+RD	+RD
-RD	-RD
E	E

5 V DC-type GT02/GT02L

GT side (5V DC RS422/485)

Pin name	Signal
+	＋5V
−	0V
FG	FG
+SD	+SD
-SD	-SD
+RD	+RD
-RD	-RD
E	E

4.3.2 RS422 Connection with FP-X COM Port

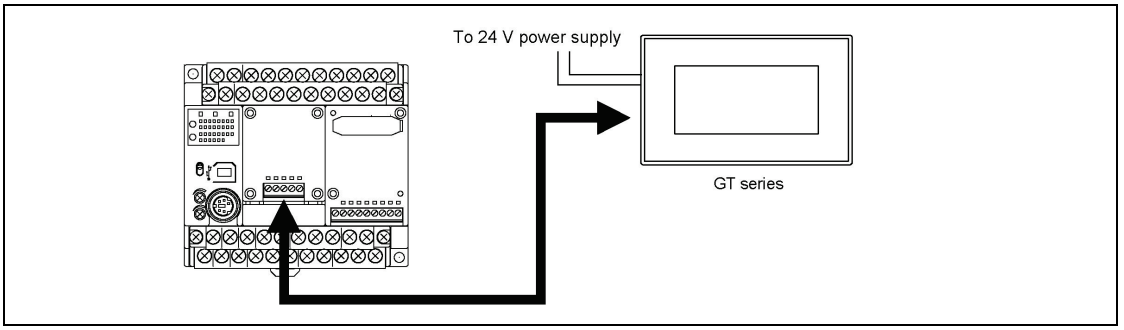

Usable models

PLC		PLC communication cable	Programmable display	
FP-X	AFPX-COM3	Loose-wire cable	5 V DC 24 V DC	RS422/RS485 type

Connecting to the FP-X Communication cassette, 1-channel type RS485/RS422

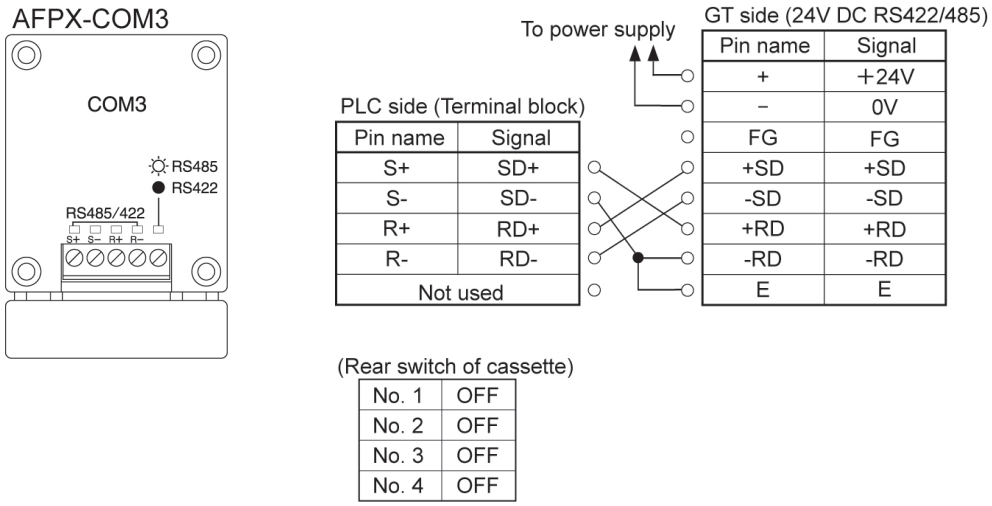

Pin name	Signal
S+	SD+
S-	SD-
R+	RD+
R-	RD-
Not used	

Pin name	Signal
+	+24V
−	0V
FG	FG
+SD	+SD
-SD	-SD
+RD	+RD
-RD	-RD
E	E

No. 1	OFF
No. 2	OFF
No. 3	OFF
No. 4	OFF

4.3.3 RS422 Connection with FP2/FP2SH COM Port

Connecting to the COM port

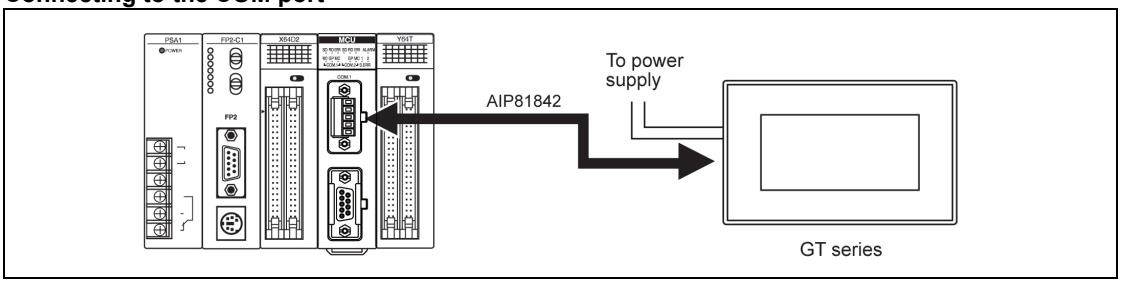

Usable models

PLC		PLC communication cable		Programmable display	
FP2 Multi Communication Unit	Communication block FP2-CB422	D-SUB 9-pin loose-wire cable	AIP81842	5 V DC 24 V DC	RS422/ RS485 type

Connecting to the FP2 Multi Communication Unit (MCU) + Communication block (RS422)

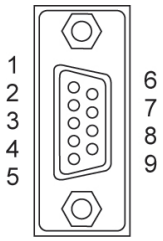

PLC side

Pin No.	Signal	Cable color (Dot mark)
1	(NC)	Brown (Black dot)
2	SD+	Brown (Red dot)
3	RD+	Yellow (Black dot)
4	SD-	Yellow (Red dot)
5	RD-	Green (Black dot)
6	-	-
7	-	Green (Red dot)
8	-	-
9	-	-

To power supply

GT side (24V DC RS422/485)

Pin name	Signal
+	+24V
−	0V
FG	FG
+SD	+SD
-SD	-SD
+RD	+RD
-RD	-RD
E	E

4.3.4 RS422 Connection with C-NET Adapter

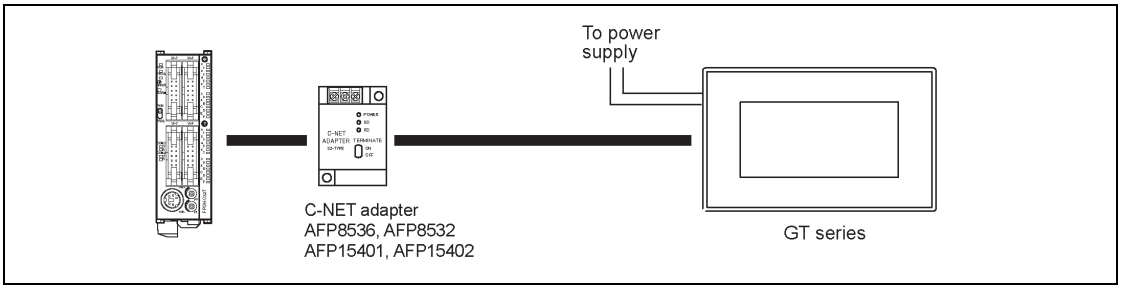

Usable models

PLC	PLC communication cable		Programmable display	
FP series	C-NET adapter	AFP8536 AFP8532 AFP15401 AFP15402	5 V DC 24 V DC	RS422/RS485 type

Connection method

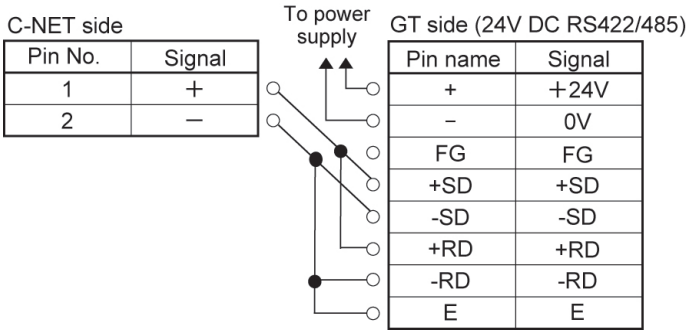

Communication settings on the PLC side

Specify the setting to match with the setting for the GT using the tool software at the PLC side.

C-NET adapter setting

Set the termination (TERMINATE) to on.

4.4 RS485 Connection

4.4.1 Difference of Terminal blocks Between GT Models

Although the terminal blocks vary between the 5 V DC type and 24 V DC type, the connection method is the same.
The connection diagram is described with the terminal block for 24 V DC.

24 V DC type

GT side (24V DC RS422/485)

Pin name	Signal
+	＋24V
−	0V
FG	FG
+SD	+SD
-SD	-SD
+RD	+RD
-RD	-RD
E	E

5 V DC-type GT01

GT side (5V DC RS422/485)

Pin name	Signal
+	＋5V
−	0V
NC	NC
+SD	+SD
-SD	-SD
+RD	+RD
-RD	-RD
E	E

5 V DC-type GT02/GT02L

GT side (5V DC RS422/485)

Pin name	Signal
+	＋5V
−	0V
FG	FG
+SD	+SD
-SD	-SD
+RD	+RD
-RD	-RD
E	E

Note) RS485 communication is performed using the RS422 terminal blocks.

4.4.2 RS485 Connection with FP0R COM Port

Connecting to the COM port

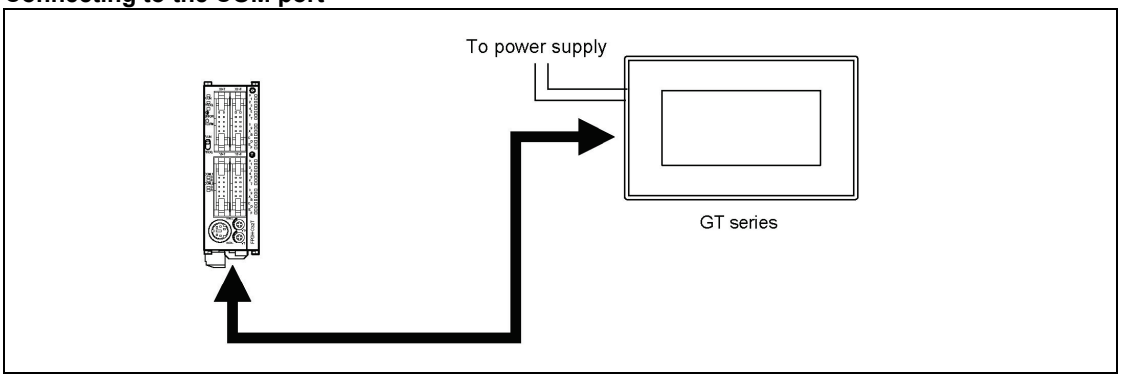

Usable models

PLC		PLC communication cable	Programmable display	
FP0R	RS485 type	Loose-wire cable	5 V DC 24 V DC	RS422/RS485 type

Connecting to the COM port of FP0R

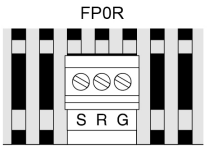

1:1 communication

PLC side

Pin name	Signal
S	+
R	–
G	E

To power supply

GT side (24V DC RS422/485)

Pin name	Signal
+	+24V
–	0V
FG	FG
+SD	+SD
-SD	-SD
+RD	+RD
-RD	-RD
E	E

PLC multiple communication

PLC side

Pin name	Signal
S	+
R	–
G	E

PLC side

Pin name	Signal
S	+
R	–
G	E

To power supply

GT side (24V DC RS422/485)

Pin name	Signal
+	+24V
–	0V
FG	FG
+SD	+SD
-SD	-SD
+RD	+RD
-RD	-RD
E	E

GT Link Function

PLC side

Pin name	Signal
S	+
R	–
G	E

To power supply

GT side (24V DC RS422/485)

Pin name	Signal
+	+24V
–	0V
FG	FG
+SD	+SD
-SD	-SD
+RD	+RD
-RD	-RD
E	E

To power supply

GT side (24V DC RS422/485)

Pin name	Signal
+	+24V
–	0V
FG	FG
+SD	+SD
-SD	-SD
+RD	+RD
-RD	-RD
E	E

4.4.3 RS485 Connection with FP-X COM Port

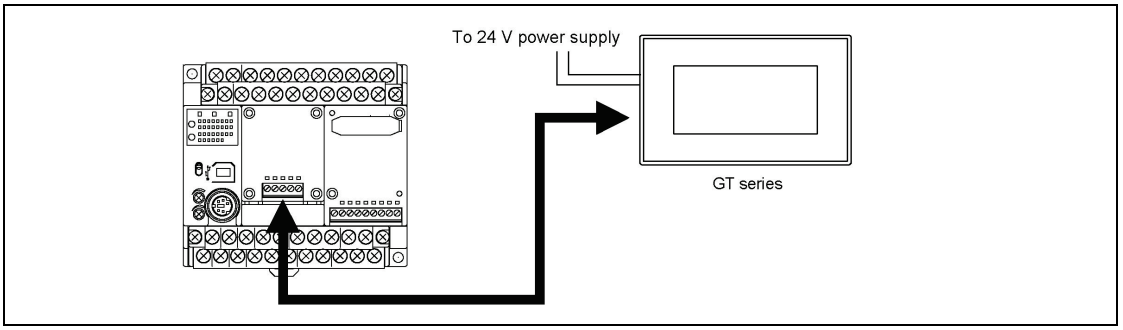

Usable models

PLC		PLC communication cable	Programmable display	
FP-X	AFPX-COM3	Loose-wire cable	5 V DC 24 V DC	RS422/RS485 type
	AFPX-COM4			
	AFPX-COM6			

Connecting to the FP-X Communication cassette, 1-channel type RS485/RS422

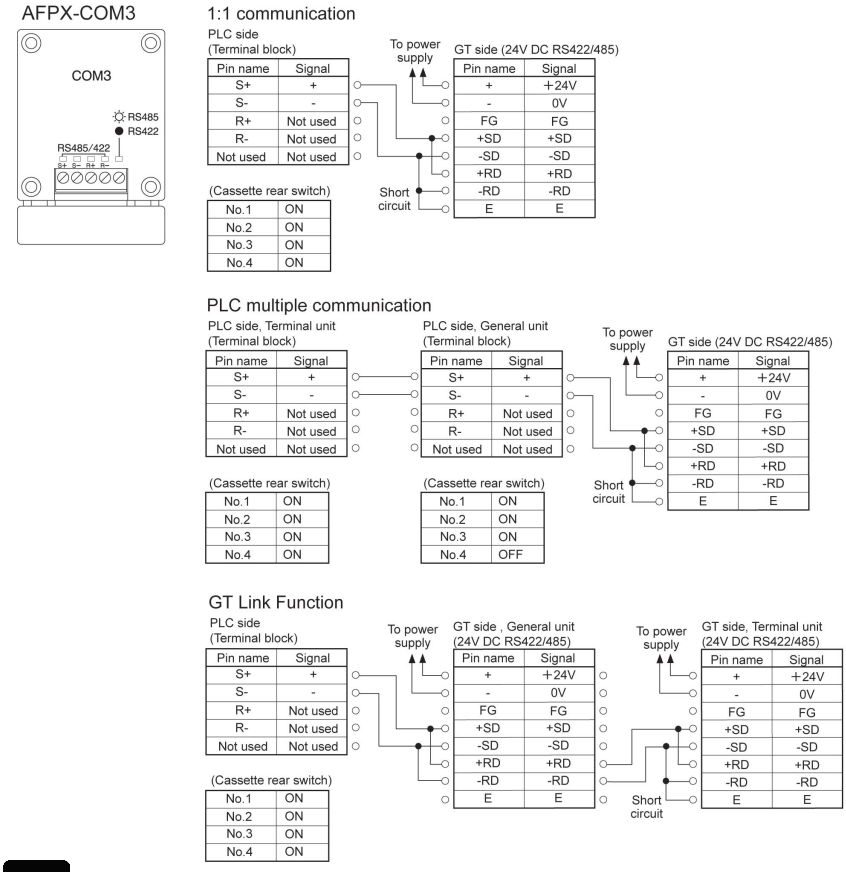

Note: Check the usable GT models for 1:N communication.

Connecting to the 1-channel type RS485 and 1-channel type RS422

AFPX-COM4

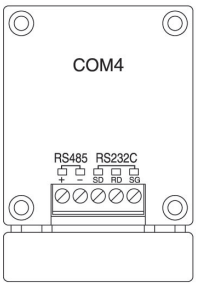

1:1 communication

PLC side
(Terminal block)

Pin name	Signal
S+	+
R-	-
SD	SD
RD	RD
SG	SG

(Cassette rear switch)
ON

To power supply

Short circuit

GT side (24V DC RS422/485)

Pin name	Signal
+	+24V
–	0V
FG	FG
+SD	+SD
-SD	-SD
+RD	+RD
-RD	-RD
E	E

PLC multiple communication

PLC side, Terminal unit
(Terminal block)

Pin name	Signal
S+	+
R-	-
SD	SD
RD	RD
SG	SG

(Cassette rear switch)
ON

PLC side, General unit
(Terminal block)

Pin name	Signal
S+	+
R-	-
SD	SD
RD	RD
SG	SG

(Cassette rear switch)
OFF

To power supply

Short circuit

GT side (24V DC RS422/485)

Pin name	Signal
+	+24V
–	0V
FG	FG
+SD	+SD
-SD	-SD
+RD	+RD
-RD	-RD
E	E

GT Link Function

PLC side
(Terminal block)

Pin name	Signal
S+	+
R-	-
SD	SD
RD	RD
SG	SG

(Cassette rear switch)
ON

To power supply

GT side, General unit
(24V DC RS422/485)

Pin name	Signal
+	+24V
–	0V
FG	FG
+SD	+SD
-SD	-SD
+RD	+RD
-RD	-RD
E	E

To power supply

Short circuit

GT side, Terminal unit
(24V DC RS422/485)

Pin name	Signal
+	+24V
–	0V
FG	FG
+SD	+SD
-SD	-SD
+RD	+RD
-RD	-RD
E	E

Note: Check the usable GT models for 1:N communication.

Connecting to the 2-channel type RS485

AFPX-COM6

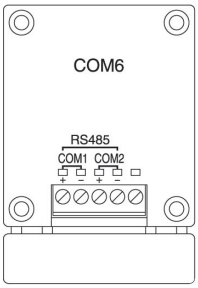

1:1 communication

PLC side
(Terminal block)

Pin name	Signal
+(COM1)	+
-(COM1)	-
+(COM2)	+
-(COM2)	-
Not used	Not used

(Cassette rear switch)

No.1	COM1:ON
No.2	COM2:ON
No.3	COM2 Baud rate
No.4	

To power supply

Short circuit

GT side (24V DC RS422/485)

Pin name	Signal
+	+24V
−	0V
FG	FG
+SD	+SD
-SD	-SD
+RD	+RD
-RD	-RD
E	E

Note) As for the connection to the "+" and "-" for the COM2, make the same connection as the "+" and "-" for the COM1.

PLC multiple communication

PLC side, Terminal unit
(Terminal block)

Pin name	Signal
+(COM1)	+
-(COM1)	-
+(COM2)	+
-(COM2)	-
Not used	Not used

(Cassette rear switch)

No.1	COM1:ON
No.2	COM2:ON
No.3	COM2 Baud rate
No.4	

PLC side, General unit
(Terminal block)

Pin name	Signal
+(COM1)	+
-(COM1)	-
+(COM2)	+
-(COM2)	-
Not used	Not used

(Cassette rear switch)

No.1	COM1:OFF
No.2	COM2:OFF
No.3	COM2 Baud rate
No.4	

To power supply

Short circuit

GT side (24V DC RS422/485)

Pin name	Signal
+	+24V
−	0V
FG	FG
+SD	+SD
-SD	-SD
+RD	+RD
-RD	-RD
E	E

Note) As for the connection to the "+" and "-" for the COM2, make the same connection as the "+" and "-" for the COM1.

GT Link Function

PLC side
(Terminal block)

Pin name	Signal
+(COM1)	+
-(COM1)	-
+(COM2)	+
-(COM2)	-
Not used	Not used

(Cassette rear switch)

No.1	COM1:ON
No.2	COM2:ON
No.3	COM2 Baud rate
No.4	

To power supply

GT side, General unit
(24V DC RS422/485)

Pin name	Signal
+	+24V
−	0V
FG	FG
+SD	+SD
-SD	-SD
+RD	+RD
-RD	-RD
E	E

To power supply

Short circuit

GT side, Terminal unit
(24V DC RS422/485)

Pin name	Signal
+	+24V
−	0V
FG	FG
+SD	+SD
-SD	-SD
+RD	+RD
-RD	-RD
E	E

Note) As for the connection to the "+" and "-" for the COM2, make the same connection as the "+" and "-" for the COM1.

Note: Check the usable GT models for 1:N communication.

4.4.4 RS485 Connection with FPΣ COM Port

Connecting to the COM port

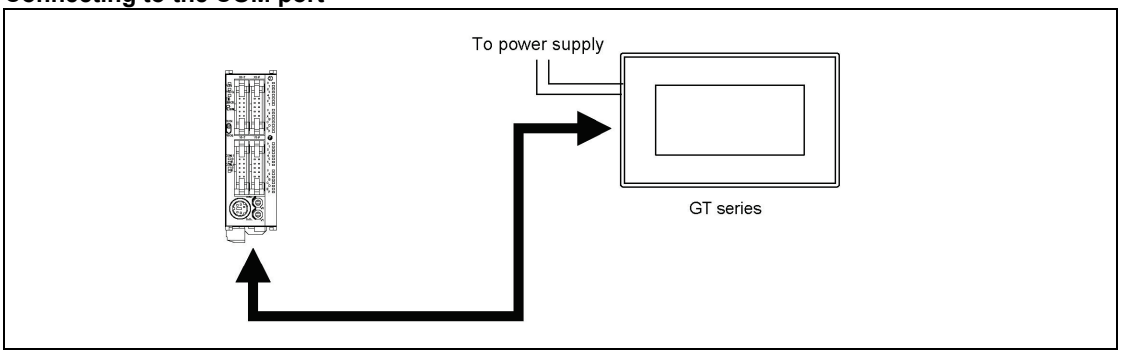

Usable models

PLC		PLC communication cable	Programmable display	
FPΣ	AFPG803	Loose-wire cable	5 V DC 24 V DC	RS422/RS485 type
	AFPG806			

Connecting to the 1-channel type RS485

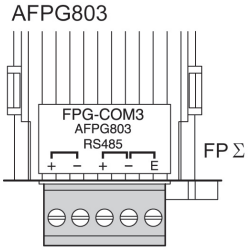

1:1 communication

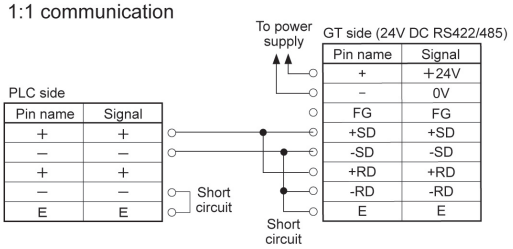

PLC multiple communication

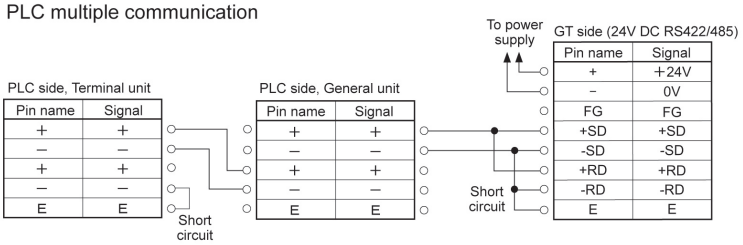

GT Link Function

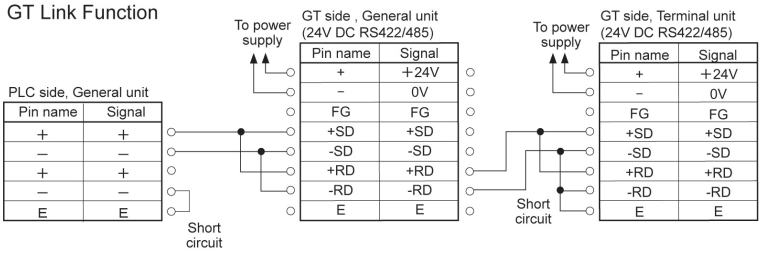

Note: Check the usable GT models for 1:N communication.

Connecting to the 1-channel type RS485 and 1-channel type RS232C

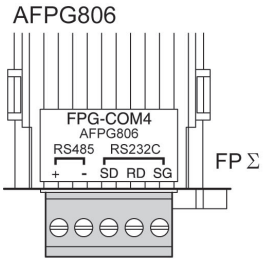

1:1 communication

PLC side
(Terminal block)

Pin name	Signal
S+	+
R-	-
SD	SD
RD	RD
SG	SG

(Cassette rear switch)

No.1	ON
No.2	Baud rate

To power supply

Short circuit

GT side (24V DC RS422/485)

Pin name	Signal
+	+24V
−	0V
FG	FG
+SD	+SD
-SD	-SD
+RD	+RD
-RD	-RD
E	E

PLC multiple communication

PLC side, Terminal unit
(Terminal block)

Pin name	Signal
S+	+
R-	-
SD	SD
RD	RD
SG	SG

(Cassette rear switch)

No.1	ON
No.2	Baud rate

PLC side, General unit
(Terminal block)

Pin name	Signal
S+	+
R-	-
SD	SD
RD	RD
SG	SG

(Cassette rear switch)

No.1	OFF
No.2	Baud rate

To power supply

Short circuit

GT side (24V DC RS422/485)

Pin name	Signal
+	+24V
−	0V
FG	FG
+SD	+SD
-SD	-SD
+RD	+RD
-RD	-RD
E	E

GT Link Function

PLC side
(Terminal block)

Pin name	Signal
S+	+
R-	-
SD	SD
RD	RD
SG	SG

(Cassette rear switch)

No.1	ON
No.2	Baud rate

To power supply

GT side, General unit
(24V DC RS422/485)

Pin name	Signal
+	+24V
−	0V
FG	FG
+SD	+SD
-SD	-SD
+RD	+RD
-RD	-RD
E	E

To power supply

Short circuit

GT side , Terminal unit
(24V DC RS422/485)

Pin name	Signal
+	+24V
−	0V
FG	FG
+SD	+SD
-SD	-SD
+RD	+RD
-RD	-RD
E	E

Note: Check the usable GT models for 1:N communication.

4.4.5 RS485 Connection with FP-e COM Port

Connecting to the COM port

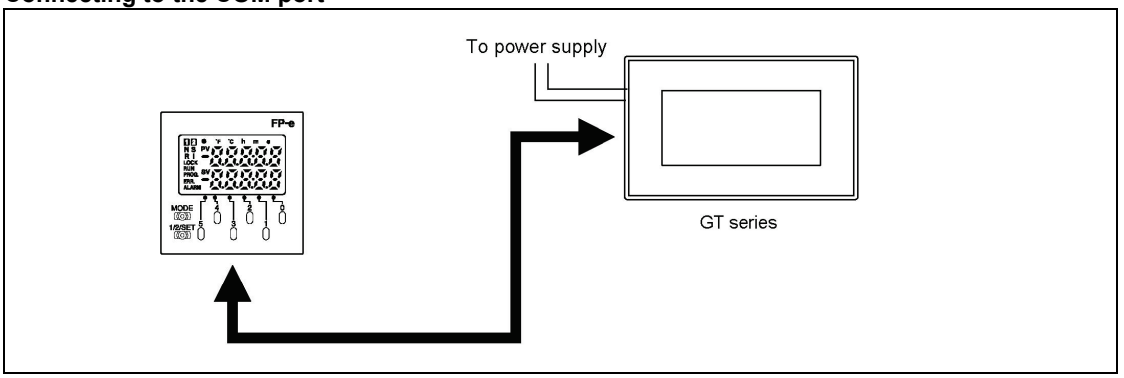

Usable models

PLC		PLC communication cable	Programmable display	
FP-e	RS485 type	Loose-wire cable	5 V DC 24 V DC	RS422/RS485 type

Connecting to the FP-e (RS485)

1:1 communication

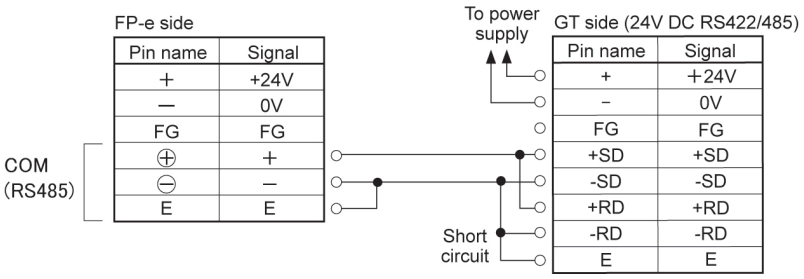

PLC multiple communication

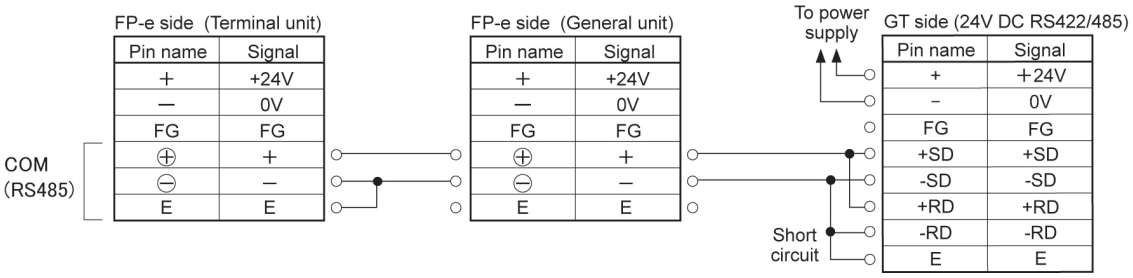

4.4.6 RS485Connection with FP2/FP2SH

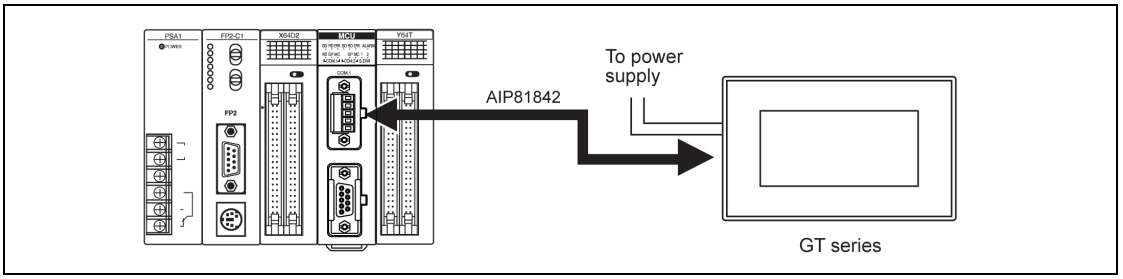

Usable models

PLC		PLC communication cable	Programmable display	
FP2 Multi Communication Unit	Communication block FP2-CB485	Loose-wire cable	5 V DC 24 V DC	RS422/ RS485 type

Connecting to the FP2 Multi Communication Unit (MCU) + Communication block (RS485)

FP2-CB485

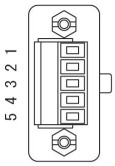

1:1 communication

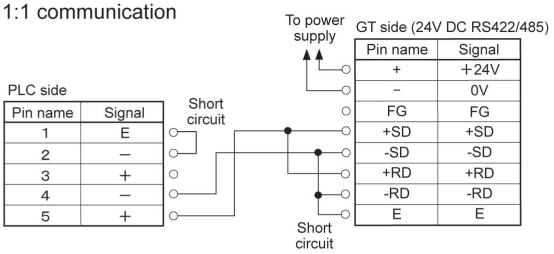

PLC multiple communication

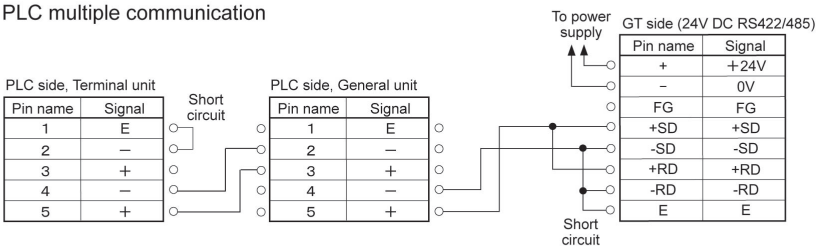

GT Link Function

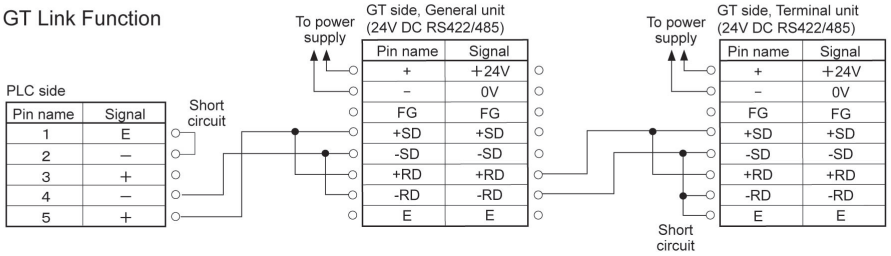

Note: Check the usable GT models for 1:N communication.

4.4.7 Precautions When Communicating With RS485

When communication with the RS485, the transmission line for sending and receiving data is the same.

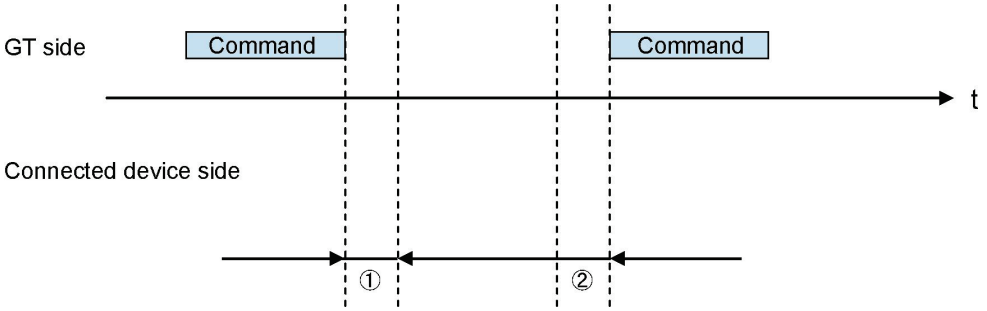

① **Time taken until the connected device sends a response after sending a command from the GT:**

If a response is sent too quickly, the GT may not be able to receive it. Adjust the time if necessary.
For our FP series FPΣ or FP-X, the time can be specified using the SYS1 instruction.

② **Time taken until the GT sends a next command after receiving a response:**

If a command is sent to quickly, the connected device may not be able to receive it.
The time can be specified in the delay time setting for transmission in the communication parameter of the GTWIN configuration setting.

4.5 Connection With a PLC

4.5.1 Automatic Communication Settings Function

After turning on the power supply, if there is not response from the PLC connected to the GT, the GT switches to the automatic setting mode for the communication conditions. In the automatic setting mode, commands are sent to the PLC while changing the communication conditions in the sequence shown below.

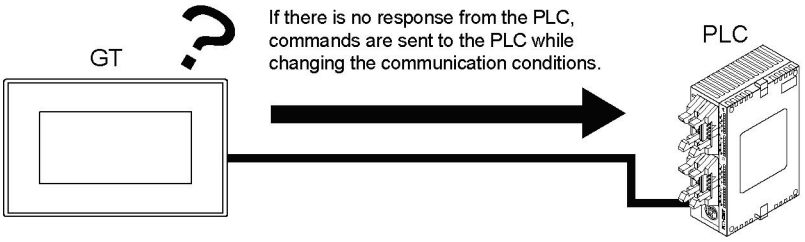

① 9600 bps, 8 bits, odd parity, 1 stop bit
② 19200 bps, 8 bits, odd parity, 1 stop bit
③ 115200 bps, 8 bits, odd parity, 1 stop bit
④ Communication conditions set in GTWIN Configuration settings

The GT, in automatic setting mode, continues to repeat steps ① to ④ until there is a response from the PLC. While it is repeating these steps, it is in the “Standby” mode under “Configuration” → “Communication Parameters” → “Handle Communication Error” on GTWIN.

Explanation of this function:

- Conditions when the automatic settings mode is in effect
  If communication is attempted the specified number of times and there is no response from the PLC, the GT goes into the automatic settings mode. The number of attempts is specified using the “No. of Retries” parameter under “GT Configuration” → “Communication Parameters” → “Handle Communication Error” on GTWIN.
- Automatically set communication conditions
  In the automatic settings mode, if there is a response from the PLC, subsequent communication is carried out under conditions matching the response. The main unit configuration settings are not updated, however, even if the communication parameters are different from those of the main unit configuration settings.

Note:

- An error response from the PLC is taken as a response, and the GT does not go into the automatic settings mode.
- If the unit is connected to the COM port of the FP0/FP1/FP2/FP2SH/FP-M, communication between the FP device and the PLC will not be possible if the target usage of the RS232C port has not been set to “Computer Link”. Always set the setting on the PLC side to match “Computer Link”.
- The automatic communication settings function cannot be used for the communication at 230400 bps on the GT01, GT11 or GT21.

4.5.2 Through Function

With the GT series, communication can be set to take place automatically between the COM port of a GT and TOOL port of a PLC in a “through function”. When the FP series tool software installed in the computer connected to the GT series as shown below is booted, PLC programs can be edited through the GT series. The through function does not require any special settings, and is always in the standby mode.

For TOOL port type

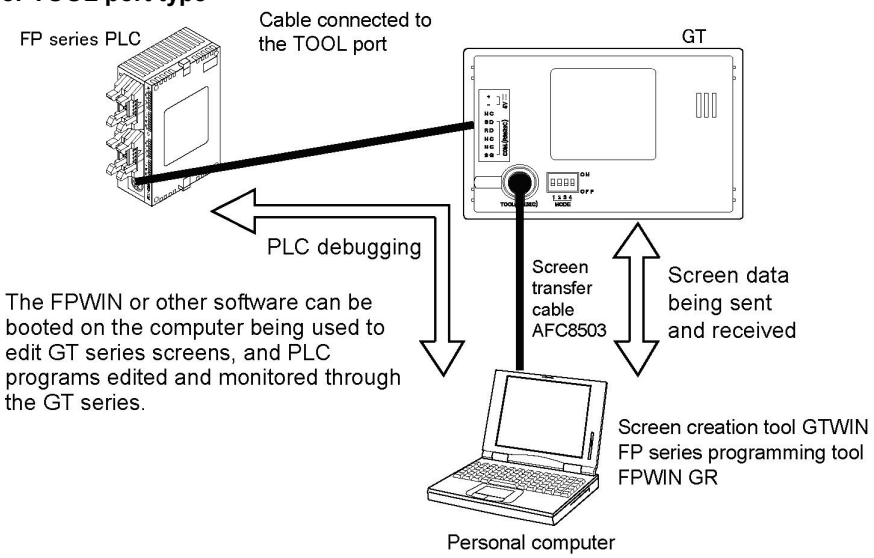

For USB port type

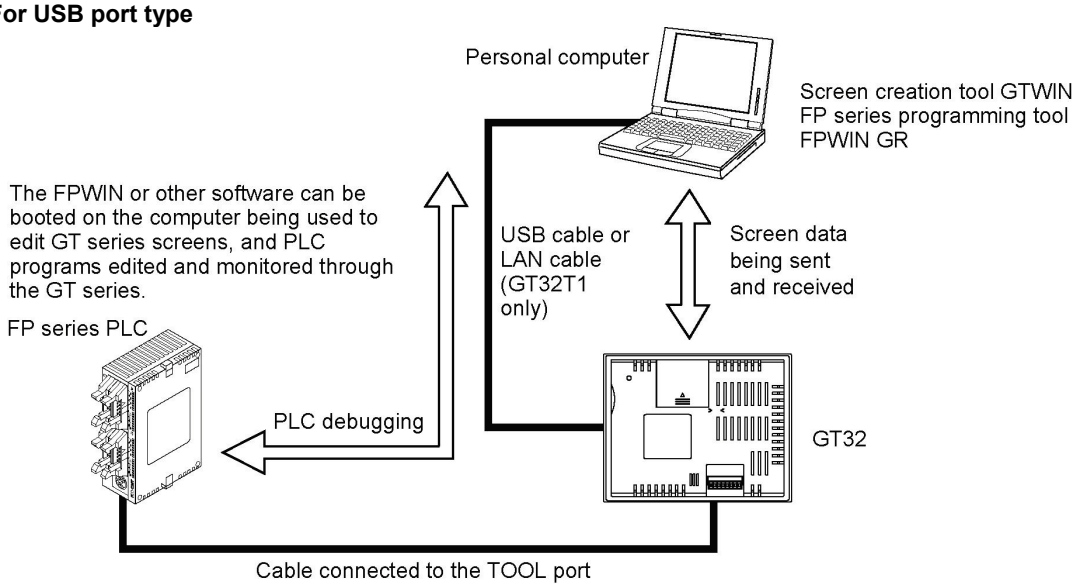

Note:

- **Precautions when using the through function**
  The system should be set up so that the Timeout period in the FP series software (FPWIN) (A) is larger than the waiting time for communication retries of the GT COM port (B), meaning (A) > (B). If the system is set up so that A = B or A < B, the through function will not work properly.
  When the baud rate of the GT TOOL port is 230400 bps, the through function cannot be used. Communicate at 115200 bps or lower for using the through function.
- For the USB port type, the OS installed in the connected computer must be Windows®2000 or later.

- **Restrictions on COM port connections**
  When connecting the GT01 to the COM port of a PLC, a separate external supply must be provided.

- **When using the FP programmer II**
  An FP Programmer II cannot be connected to the tool port of the GT01. It can be connected to the GT11 and GT21. The GT32 cannot be connected to the FP programmer II as it is connected with USB or Ethernet.

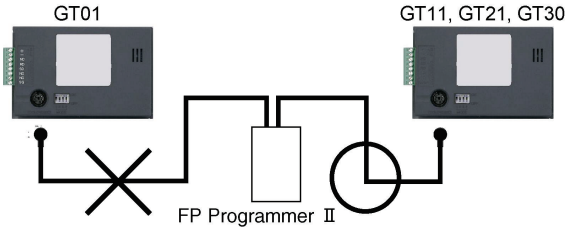

4.5.3 How to Make Communication Settings Using the FPWIN GR

Please read below to make PLC communication settings using the FPWIN GR.

1. Select “PLC system register setting” from the Option menu (O).

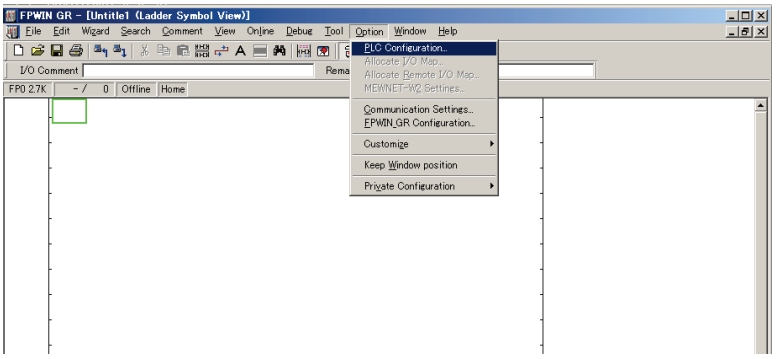

2. The window below will be displayed.

Select “Tool port setting” when connecting to the tool port or “COM port setting” when connecting to the COM port. Please match the transfer format and transmission speed settings to those of the GT.

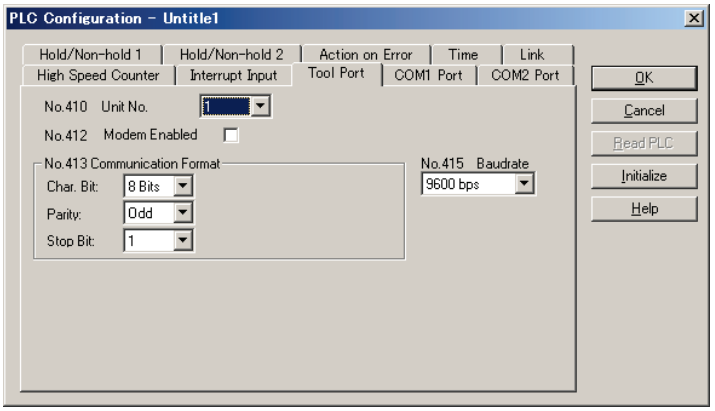

In addition to the transfer format and transmission speed settings, set the communication mode to “Computer link” when using the COM port.

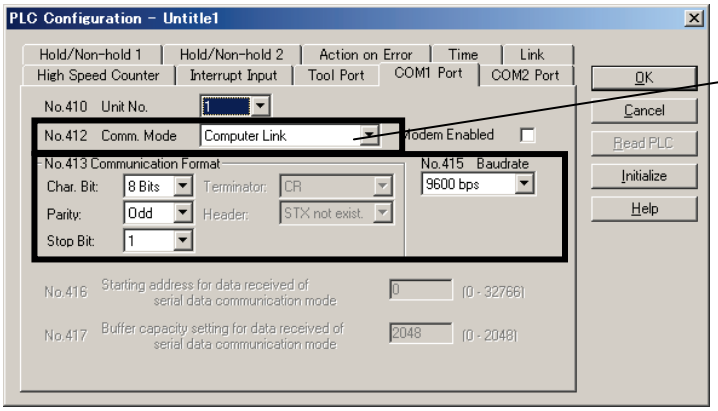

Select “Computer Link”.

Chapter 5

Troubleshooting

5.1 What to DO If Something Unusual Occurs (GT01/GT11/GT21)

Problem	Cause	Solution
Screen is blank	1) Power is not on.	1) Supply the power supply to unit as per specifications.
	2) (When only lamp and message parts are configured to the base screen) Value of substitute reference device value does not exist in substitute data.	2) Check the address of the substitute reference device and the device values on the PLC side.
Error code [ER**] appears at the top right of the screen	An error has occurred in communication between the GT and an external device (e.g. PLC).	Refer to <5.3 Troubleshooting Error Codes>.
Screen displays [No Screen data]	There is no base screen data in the GT. (Appears even when GT configuration data exists.)	Transfer base screen data.
Screen displays [Screen No. Error]	1) Screen settings from the PLC, the GT's switch part or the auto-paging indicate an unregistered screen number.	1) Create and register screen content or specify the correct screen number.
	2) When bringing up the keyboard screen during data input, an unregistered keyboard screen number was specified.	2) Create and register keyboard screen or specify the correct keyboard number.
	3) GT configuration data and keyboard screen data exist in the GT, but there is no base screen data.	3) Transfer base screen data from GTWIN.
Screen displays [Memory is Full]	The total capacity of transferred base screen data exceeds the 384 Kbyte capacity of the GT.	Delete part of the base screen data so that the capacity doesn't exceed the total capacity. Data capacity can be checked by going to [View (V)]→[Memory Usage Conditions] on GTWIN menu bar. When the data capacity is not over the limit, invalid data could possibly be remaining in the GT. When transferring data, do so after deleting the screen.
An unspecified screen appeared/there is trouble when switching screens.	1) The screen specification in the PLC screen setting, the GT switch part or the auto-paging is wrong.	1) Specify the correct screen number.
	2) The startup screen is specified in the GT configuration settings (GTWIN).	2) Check the start-up screen setting for the GT configuration settings in GTWIN. Delete unnecessary settings and re-transfer configuration data.
	3) An erroneous device or value is specified in the first word of the basic communication area word device.	3) Check the device content specified on the PLC side in the first word of the basic communication area. (Do not use the basic communication area with ladder programs.)

Problem	Cause	Solution
Screen doesn't switch	1) No screen number has been written to the screen setting area (the first word in the basic communication area word device) from the PLC.	1) Specify correct screen number.
	2) The screen number to which you are attempting to switch has already been written from the PLC to the screen setting area (the first word in the basic communication area word device.)	2) Refer to Reference Manual.
Screen is dim	1) The power voltage may be low.	1) Check the capacity of the power supply unit if it is enough for the GT's power consumption.
	2) The contrast is set too low.	2) Bring up the system menu and adjust the contrast.
	3) The backlight brightness is set too dark.	3) Bring up the system menu and adjust the brightness.
	4) The backlight is off due to the [Backlight Auto-off] setting in the [Setup] of the GT configuration settings in GTWIN.	4) Touching any area of the screen lights that area. If a switch part is set on the touched area, the area will not light even if touched. To change the setting, change the content of the backlight auto-off settings.
Backlight goes off too quickly	1)The backlight auto-off timer setting is too short.	1) Change the backlight auto-off timer setting.
Date/time display is incorrect	1) The PLC's internal calendar timer used as a reference is incorrect.	1) Adjust by rewriting the value in the PLC's internal calendar timer.
Touch panel doesn't work	1) Valid conditions have been set for the switch part, but those conditions have not been met.	1) Check that the device status conditions on the PLC side are valid.
No operating sounds are heard when the touch panel is pressed.	1) The [Switch Sounds] setting under [Options] in the switch part attributes is set to [Disabled].	1) Change the setting to [Enabled].
	2)The [Touch Sounds] setting under [Setup] in the GT configuration settings in GTWIN is set to [Disabled].	2) Change the setting to [Enabled].
Nothing happens for about 10 seconds after turning on power.	Communication conditions of GT (COM port) and PLC differ.	Verify communication settings of GT and PLC and then make them the same.

Problem	Cause	Solution
Buzzer sounds continuously	Bit F of the first word in the basic communication area bit device is set to ON.	Set the F bit to OFF on the PLC side. (Do not use the basic communication area with ladder programs.)
Backlight color changes/ flashes	Bits A and B, and Bit D, of the first word (backlight color setting) in the basic communication area bit device are set to ON. Or, Bits C and D (backlight flashing setting) are set to ON.	Perform correct bit operations on the PLC side. (Do not use the basic communication area with ladder programs.)
Cannot transfer data from GTWIN	1) The screen transfer cable is not connected.	1) Confirm that the screen transfer cable is correctly and firmly connected.
	2) The PC and GT COM port are connected.	2) Connect to TOOL port with screen transfer cable.
	3) The TOOL port of the GT has been set to 230400 bps.	3) Set the baud rate for the GTWIN communication condition to 230400 bps before transfer data.
	4) The network type in the communication settings has been set to either “Ethernet” or “USB”.	4) Set the network type in the communication settings to “RS232C”.
- Screen is blank (power supply and substitution settings noted above do not apply) - An incorrect screen is displayed (error codes and erroneous date and time items noted above do not apply) - Switch doesn’t work (grid and validity settings noted above are correct) - Buzzer sounds continuously	An error has occurred in the GT system.	1) After confirming the safety of the device, etc., turn off the power supply and then turn it on again. The GT CPU will be reset. ⇩ 2) If 1) produces no change, bring up the system menu and initialize the memory (F-ROM), then transfer data again from GTWIN to the GT. NOTE: When doing this, all base screen data, GT setting data, keyboard screen data, and bitmap data will be lose. Before doing this, make sure all data has been backed up. ⇩ 3) If 2) produces no change, set the operating mode setting switches 2, 3 and 4 on the rear of the main unit to ON and reset the power supply. NOTE: When doing this, all of the contents will revert to those in effect at the time of shipping, and all of the GT memory contents will be cleared. Before doing this, make sure all data has been backed up.

The backlight flashes for a while when the F-ROM clear is executed.
Once the F-ROM clear is complete, the buzzer sounds and the message "Memory is cleared" is displayed on the screen.
Set the operation mode setting switches to the state in the normal use after confirming this message, and turn on the power again.

5.2 What to DO If Something Unusual Occurs (GT02/GT02L/GT03-E/GT05/GT12/GT32/GT32-E)

Problem	Cause	Solution
Screen is blank	1) Power is not on.	1) Supply the power supply to unit as per specifications.
	2) (When only lamp and message parts are configured to the base screen) Value of substitute reference device value does not exist in substitute data.	2) Check the address of the substitute reference device and the device values on the PLC side.
Error code [ER****] appears at the top right of the screen	An error has occurred in communication between the GT and an external device (e.g. PLC).	Refer to <Troubleshooting Error Codes>.
Screen displays [No Screen data]	There is no base screen data in the GT. (Appears even when GT configuration data exists.)	Transfer base screen data from GTWIN.
Screen displays [Screen No. Error]	1) Screen settings from the PLC, the GT's switch part or the auto-paging indicate an unregistered screen number.	1) Create and register screen content or specify the correct screen number.
	2) When bringing up the keyboard screen during data input, an unregistered keyboard screen number was specified.	2) Create and register keyboard screen or specify the correct keyboard number.
	3) GT configuration data and keyboard screen data exist in the GT, but there is no base screen data.	3) Transfer base screen data from GTWIN.
	-	4) Press [ESC] button to return to the previous screen.
Screen displays [Memory is Full]	The total capacity of transferred base screen data exceeds the memory capacity of the GT.	Delete part of the base screen data so that the capacity doesn't exceed the total capacity. Data capacity can be checked by going to [View (V)]→[Memory Usage Conditions] on GTWIN menu bar. When the data capacity is not over the limit, invalid data could possibly be remaining in the GT. When transferring data, do so after deleting the screen.
An unspecified screen appeared/there is trouble when switching screens.	1) The screen specification in the PLC screen setting, the GT switch part or the auto-paging is wrong.	1) Specify the correct screen number.
	2) The startup screen is specified in the GT configuration settings (GTWIN).	2) Check the start-up screen setting for the GT configuration settings in GTWIN. Delete unnecessary settings and re-transfer configuration data.
	3) An erroneous device or value is specified in the first word of the basic communication area word device.	3) Check the device content specified on the PLC side in the first word of the basic communication area. (Do not use the basic communication area with ladder programs.)
Screen doesn't switch	1) No screen number has been written to the screen setting area (the first word in the basic communication area word device) from the PLC.	1) Specify correct screen number.
	2) The screen number to which you are attempting to switch has already been written from the PLC to the screen setting area (the first word in the basic communication area word device.)	2) Refer to Reference Manual.

Problem	Cause	Solution
Screen is dim	1) The power voltage may be low.	1) Check the capacity of the power supply unit if it is enough for the GT's power consumption.
	2) The contrast is set too low.	2) Bring up the system menu and adjust the contrast.
	3) The backlight is off due to the [Backlight Auto-off] setting in the [Setup] of the GT configuration settings in GTWIN.	3) Touching any area of the screen lights that area. If a switch part is set on the touched area, the area will not light even if touched. To change the setting, change the content of the backlight auto-off settings.
Backlight goes off too quickly	1)The backlight auto-off timer setting is too short.	1) Change the backlight auto-off timer setting.
Date/time display is incorrect (when using the GT's internal clock)	1) The GT's internal clock used as a reference is incorrect.	1) Adjust the clock from the system menu.
	2) No battery has been inserted.	2) Purchase a battery and install it.
	3) The battery has run down.	3) Replace the battery.
Date/time display is incorrect (when using the PLC's internal calender timer)	1) The PLC's internal calendar timer used as a reference is incorrect.	1) Adjust by rewriting the value in the PLC's internal calendar timer.
Hold PLC Device data content isn't saved	1) No battery has been inserted.	1) Purchase a battery and install it.
	2) The battery has run down.	2) Replace the battery.
Date/time display is incorrect	1) The PLC's internal calendar timer used as a reference is incorrect.	1) Adjust by rewriting the value in the PLC's internal calendar timer.
Touch panel doesn't work	1) Valid conditions have been set for the switch part, but those conditions have not been met.	1) Check that the device status conditions on the PLC side are valid.
No operating sounds are heard when the touch panel is pressed. (Except GT02L)	1) The [Switch Sounds] setting under [Options] in the switch part attributes is set to [Disabled].	1) Change the setting to [Enabled].
	2)The [Touch Sounds] setting under [Setup] in the GT configuration settings in GTWIN is set to [Disabled].	2) Change the setting to [Enabled].
Nothing happens for about 10 seconds after turning on power.	Communication conditions of GT (COM port) and PLC differ.	Verify communication settings of GT and PLC and then make them the same.

Problem	Cause	Solution
Buzzer sounds continuously	Bit F of the first word in the basic communication area bit device is set to ON.	Set the F bit to OFF on the PLC side. (Do not use the basic communication area with ladder programs.)
Backlight color changes/ flashes	Bits A and B, and Bit D, of the first word (backlight color setting) in the basic communication area bit device are set to ON. Or, Bits C and D (backlight flashing setting) are set to ON.	Perform correct bit operations on the PLC side. (Do not use the basic communication area with ladder programs.)
Cannot transfer data from GTWIN	1) The USB or LAN cable (GT32T1) is not connected.	1) Confirm that the screen transfer cable is correctly and firmly connected.
	2) The PC and GT COM. port are connected.	2) Connect the USB cable or LAN cable (GT32T1) correctly.
	3) The network type in the communication settings has been set to “RS232C”.	3) Set the network type in the communication settings to “Ethernet” for using a LAN cable. Set the network type to “USB” for using a USB cable.
- Screen is blank (power supply and substitution settings noted above do not apply) - An incorrect screen is displayed (error codes and erroneous date and time items noted above do not apply) - Switch doesn’t work (grid and validity settings noted above are correct) - Buzzer sounds continuously	An error has occurred in the GT system.	1) After confirming the safety of the device, etc., turn off the power supply and then turn it on again. The GT CPU will be reset. ⇩ 2) If 1) produces no change, bring up the system menu and initialize the memory (F-ROM), then transfer data again from GTWIN to the GT. NOTE: When doing this, all base screen data, GT setting data, keyboard screen data, and bitmap data will be lost. Before doing this, make sure all data has been backed up. ⇩ 3) If 2) produces no change, set the operating mode setting switches 2, 3 and 4 on the rear of the main unit to ON and reset the power supply. NOTE: When doing this, all of the contents will revert to those in effect at the time of shipping, and all of the GT memory contents will be cleared. Before doing this, make sure all data has been backed up.
No sound is output.	1) The speaker is not connected.	1) Connect an audio output equipment (speaker with a built-in ϕ3.5-mini plug amplifier).
	2) The setting for using sound is not on.	2) Set the sound setting of the GTWIN configuration settings to be on.

The backlight flashes for a while when the F-ROM clear is executed.
Once the F-ROM clear is complete, the buzzer sounds and the message "Memory is cleared" is displayed on the screen.
Set the operation mode setting switches to the state in the normal use after confirming this message, and turn on the power again.

Operation security function

Message	Cause	Solution
“Incorrect password.” Is displayed on the login screen.	An unregistered password was entered.	Enter the registered password.
“Incorrect password.” Is displayed on the password change screen.	An incorrect password was entered in the Current password field.	Enter the registered password correctly.
“Please verify your password again.” Is displayed on the password change screen.	The entered New password and Confirm password are different.	Enter the same password in the New password and Confirm password fields.
“Use another password.” Is displayed on the password change screen.	The password that has been already registered is tried to be registered.	Enter an unregistered new password.
“Password setting incomplete.” Is displayed on the password change screen.	There are items that are not entered.	Enter all items.
“Your password cannot be deleted.” Is displayed on the password management screen.	Your password was tried to be deleted.	Your password cannot be deleted. If you want to delete it, delete from the “Operation security password edit" on GTWIN.
“Your level cannot be changed” is displayed on the password management screen.	Your level was tried to be changed.	Your level cannot be changed. If you want to change it, change from the “Operation security password edit” on GTWIN.

When using the SD memory card.
Data may be erased or the SD memory card may be damaged during the operation. Take measures for the situations as below.

Problem	Measures
Data in SRAM (Record area for logging) is lost.	Transmitting GT configuration setting file using the logging function clears the information on the SRAM. Save all the data remained in the log before transmission.
	When data cannot be saved in the SD memory card, the data beginning with the chronologically oldest data will be overwritten if the record area for logging is full. Make the setting of the notice device for the case that the SD card free space is less than the specified size.
SD memory card is damaged and data cannot be read because SD memory card was ejected during save.	Stop the logging of data. Eject the SD memory card after turning on the setting for stopping the trigger occurrence for all logging files in the record area control. (Activate the setting for stopping the trigger occurrence with switch parts, etc.)
	Set not to save in the SD memory card. Turn on the control device for stopping write to the SD memory card, and then eject the card.
SD memory card is damaged by power discontinuity due to power failure and data cannot be read	A UPS (Uninterruptible power source) is used. When using a UPS, the power is supplied to the PLC and GT both from the UPS, and the signal for logging stop/file creation is sent to the GT from the PLC using the power failure alarm signal that is input into the PLC as a trigger. (See figure below.) 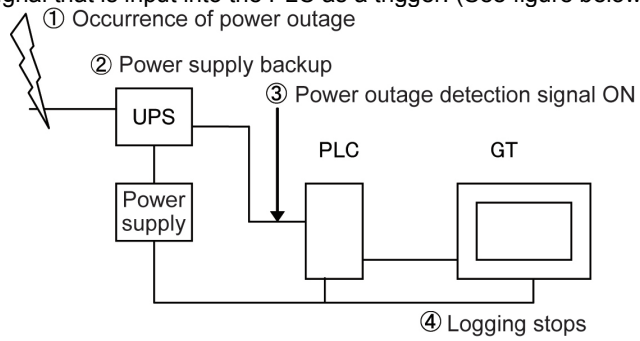

5.3 Error Codes and How to Handle Them

5.3.1 About Error Codes

When an error occurs in the GT series, an error code displays at the top right of the screen. There are two types of error codes, GT series error codes and PLC error codes.

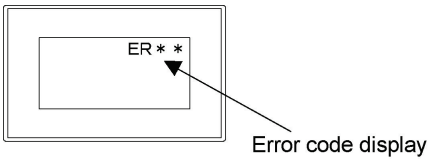

5.3.2 GT Series Error Codes

The following error codes are displayed when there is an error in the GT.

For GT01, GT11 and GT21

Code No.	Content	Cause and solution
ERFF	Time up error No response from the PLC.	1) The PLC connection cable is disconnected. Check the connection cable to make sure it is connected. 2) There is a temporary error due to noise, etc. Re-supply power to the PLC and GT.
ER21	Data error A data error occurred during communication.	1) An error exists in the communication condition settings. Check the PLC and GT baud rate and transfer format. 2) There is a temporary error due to noise, etc. Re-supply power to the PLC and GT.
ER22	Overrun error The GT cannot receive data.	The reception buffer in the GT is overflowing. There could be an error in the PLC Re-supply power to the PLC and GT.

For GT02, GT02L, GT03-E, GT05, GT12, GT32 and GT32-E

Code No.	Content	Cause and solution
**00FF	Time up error	1) The PLC connection cable is disconnected. Check the connection cable to make sure it is connected. 2) There is a temporary error due to noise, etc. Re-supply power to the PLC and GT.
**0100	Keyboard screen data parts digit error	Check if the digit of the data parts on the keyboard screen has been set correctly.
**0101	Alarm history error	When updating the alarm history display is stopped, alarm history data displayed on the GT's screen has been updated within the memory. Once the stop of display update is cancelled, new data is displayed.
**0102	True Type font file transfer error	Screen data is not transferred correctly. Re-transfer after deleting all data.
**0500	Tool setting error	The device that cannot be used is specified for the data. Check if the used device is correct. (e.g. the word device is set in the bit area.)
**1000	SD memory card not inserted	The SD memory card is not inserted to the SD memory card slot properly. Check the SD memory card slot.
**1001	SD memory card writing error	Data cannot be written to the SD memory card. Check whether the SD memory card is not write-protected.

Code No.	Content	Cause and solution
**1002	SD memory card memory full	Data cannot be written as the memory of the SD memory card has been exhausted. Delete some data in the SD memory card or prepare a new SD memory card.
**1003	SD memory card reading error	The data in the SD memory card cannot be read. Check whether the saved data in the SD memory card is not damaged with a PC.
**1004	SD memory card data error	The data loaded from a SD memory card does not match the GT type. Read the data in the SD memory card with GTWIN, and check whether it is not damaged.
**1005	SD memory card saved file name error	The file name to be saved to the SD memory card from the GT is not specified properly. Specify the file name properly.
**1006	SD memory card recognition error	The SD memory card cannot be recognized. Check the SD memory card used.
**1020	PLC model unmatch error	Check if the PLC program for transfer matches the destination PLC.
**1021	PLC model unsupported error	The selected PLC model is not supported. Confirm the PLC model.
**1022	Password protection error	(1) Incorrect passwords were input three times or more. Input the correct password after turning the power supply off and then on again. (2) The upload protection has been set for the PLC. (3) The number of digits was changed when setting a new password with the FP monitor function. Cancel the password setting first to change the number of digits.
**1023	Master memory installation error	A master memory is installed in the PLC (FP-X).Programs cannot be transferred to the PLC with the master memory from a SD memory card.
**1024	Program memory shortage	Program memory shortage in the destination PLC. Decrease the program size using the PLC tool.
**1025	General-purpose memory shortage	General-purpose memory shortage in the destination PLC.
**1027	Remote mode error	The PLC (FP2/FP2SH) is set to the RUN mode. Change to the REMOTE mode or PROG. mode.
**102D	Forced operation error	Check if a device that cannot be forcibly operated in the PROG. mode has been forcibly turned on or off.
**1040	The record area for logging was overwritten.	A SD memory card is not inserted. Check the SD memory card slot.
**1041		Data cannot be written into the SD memory card. Check whether the SD memory card is not write-protected.
**1042		As the memory of the SD memory card has been exhausted. Delete some data in the SD memory card or prepare a new SD memory card.
**1044		The setting to stop writing to SD memory card has been set. Cancel the writing stop setting.
**1043	SD memory card writing error	The setting to stop writing to SD memory card has been set. Cancel the writing stop setting.
**1045	The record area for logging cannot be reserved in the SRAM.	Transfer all data.
＊＊10A0	FROM write error	The firmware file loaded from a SD card is damaged. Recreate the file in the SD card.
＊＊1100	Ethernet IP address setting error	The IP address for Ethernet is not specified correctly. Check the IP address for the GT.

＊＊1101	Ethernet subnet mask setting error	The subnet mask for Ethernet is not specified correctly. Check the subnet mask for the GT.
＊＊1102	Ethernet default gateway setting error	The default gateway for Ethernet is not specified correctly. Check the default gateway for the GT.
＊＊1103	Ethernet port number setting error	The port number for Ethernet is not specified correctly. Check the port number error for the GT.

Code No.	Content	Cause and solution
**1060	Index register value error	The device value for index modifier is out of the setting range. Check the setting value.
**1080	Start time device value error	The value at the start of the line graph function is out of the setting range. Check the setting value.
**2000	Connected GT designation area error The bit corresponding to the connected GT in the connected GT designation area.	The bit in the connected GT designation area corresponding to the station number of the connected GT is not on. Check the connected GT designation area.
**20FF	Token error There is a GT unresponsive to the token.	When the error code is indicated for a certain period of time after the power supply turned on.: 1. The timings for turning on multiple GT units are different. Arrange the wiring that enables the power supplies to be simultaneously turned on. 2. The screen displays for all GT units have not completed. The error code disappears when the screen displays for all GT units have completed. 3. The settings for the startup screen display vary. Make the same setting for all the connected GT units. When the error code is always indicated: 1. There is an unconnected or faulty GT. Check if there is a GT indicating [**20FF]. Reconnect the GT, or turn off the bit in the connected GT designation area. 2. The communication parameters are not specified correctly. Check the baud rate and transmission format for the GT. 3. The same station number is used for more than one GT units. Check the station number setting of the connected GT units. 4. Another GT is reading a SD card. The indication disappears when reading the SD card has completed.
**F000	User's memory error	The memory for saving screen data may be damaged. Please contact us.

5.3.3 When Connected to a FP Series PLC

Error codes which are sent from the PLC are listed in the table below. For details, refer to the table of MEWTOCOL-COM communication errors in PLC user's manuals.

For GT01, GT11 and GT21

Code No.	Content	Cause and solution
ER21	Data error A data error occurred during communication.	1) There is an error in the communication condition settings. Check the PLC and GT baud rate and transfer format. 2) There is a temporary error due to noise, etc. Re-supply power to the PLC and GT.
ER22	Overrun error The PLC isn't receiving data.	The CPU unit's reception buffer is overflowing. There could be an error in the PLC. Re-supply power to the PLC and GT.
ER40	BCC error A data error occurred during communication.	1) There is a temporary error due to noise, etc. Re-supply power to the PLC and GT. 2) There is an error in the CPU unit. Re-supply power to the PLC and GT.
ER41	Format error The PLC has been sent a command that doesn't match the protocol.	1) There is a temporary error due to noise, etc. Re-supply power to the PLC and GT. 2) There is an error in the CPU unit. Re-supply power to the PLC and GT.
ER42	NOT support error The GT has sent a non-supported command to the PLC.	1) There is a temporary error due to noise, etc. Re-supply power to the PLC and GT. 2) There is an error in the CPU unit. Re-supply power to the PLC and GT.
ER53	BUSY error The PLC is currently processing another command.	A large amount of data is being communicated with another RS232C port on the PLC. Wait until the error is gone.
ER60	Parameter error	The specified parameter does not exist, or it cannot be used.
ER61	Data run error There is an error in the register or relay number.	A register or relay number which doesn't exist in the PLC was specified during screen creation using GTWIN. Correct the output device being used with the part, or the transfer of clock data to an external device.

For GT02, GT02L, GT03-E, GT05, GT12, GT32 and GT32-E

Code No.	Content	Cause and solution
ER0021	Data error A data error occurred during communication.	1) There is an error in the communication condition settings. Check the PLC and GT baud rate and transfer format. 2) There is a temporary error due to noise, etc. Re-supply power to the PLC and GT.
ER0022	Overrun error The PLC isn't receiving data.	The CPU unit's reception buffer is overflowing. There could be an error in the PLC. Re-supply power to the PLC and GT.
ER0040	BCC error A data error occurred during communication.	1) There is a temporary error due to noise, etc. Re-supply power to the PLC and GT. 2) There is an error in the CPU unit. Re-supply power to the PLC and GT.
ER0041	Format error The PLC has been sent a command that doesn't match the protocol.	1) There is a temporary error due to noise, etc. Re-supply power to the PLC and GT. 2) There is an error in the CPU unit. Re-supply power to the PLC and GT.
ER0042	NOT support error The GT has sent a non-supported command to the PLC.	1) There is a temporary error due to noise, etc. Re-supply power to the PLC and GT. 2) There is an error in the CPU unit. Re-supply power to the PLC and GT.
ER0053	BUSY error The PLC is currently processing another command.	A large amount of data is being communicated with another RS232C port on the PLC. Wait until the error is gone.
ER0060	Parameter error	The specified parameter does not exist, or it cannot be used.
ER0061	Data run error There is an error in the register or relay number.	A register or relay number which doesn't exist in the PLC was specified during screen creation using GTWIN. Correct the output device being used with the part, or the transfer of clock data to an external device.

5.3.4 When Connected to a PLC (FX Series) Made by Mitsubishi Electric Corporation

For GT01, GT11 and GT21

Code No.	Content	Cause and solution
ERFF	Time up error There is no response from the PLC.	1) PLC connection cable is disconnected. Check the wiring of the connection cable and check for disconnection. 2) It is a temporary error caused by noise, etc. Turn on the power supplies for PLC or GT again.
ER10	Data error A data error occurred during communication	Check for errors in the communication conditions settings.
ER12	Overrun error The GT cannot receive data.	PLC runaway might be the problem.
ER61	PLC error A NAK error has been returned from the PLC.	Verify the PLC settings.

For GT02, GT02L, GT03-E, GT05, GT12, GT32 and GT32-E

Code No.	Content	Cause and solution
ERFFFE	NAK error A NAK error has been returned from the PLC.	Verify the PLC settings.

5.3.5 When Connected to a PLC Made by Omron Corporation

For GT01, GT11 and GT21

Code No.	Content	Cause and solution
ER00	Time up error There is no response from the PLC.	1) PLC connection cable is disconnected. Check the wiring of the connection cable and check for disconnection. 2) It is a temporary error caused by noise, etc. Turn on the power supplies for PLC or GT again.
ER01	Cannot be executed due to operation mode. (The PLC received the command that cannot be executed in the operation mode.)	Change the mode of the PLC from the operation mode to the monitor mode.
ER10	Data error A data error occurred during communication	Check for errors in the communication conditions settings.
ER12	Overrun error The GT cannot receive data.	PLC runaway might be the problem.
ER15	Numerical data error Designated read/write area is wrong.	Verify whether or not the reference device used with the basic communication area and each part is a readable and writable area.

- Error codes other than these are based on Omron PLC error codes.
- Be sure to used the PLC in monitor mode. Otherwise, communication will not work properly.

For GT02, GT02L, GT03-E, GT05, GT12, GT32 and GT32-E

Code No.	Content	Cause and solution
ER0001	Cannot be executed due to operation mode. (The PLC received the command that cannot be executed in the operation mode.)	Change the mode of the PLC from the operation mode to the monitor mode.
ER0010	Data error A data error occurred during communication	Check for errors in the communication conditions settings.
ER0012	Overrun error The GT cannot receive data.	PLC runaway might be the problem.
ER0015	Numerical data error Designated read/write area is wrong.	Verify whether or not the reference device used with the basic communication area and each part is a readable and writable area.

- Error codes other than these are based on Omron PLC error codes.
- Be sure to used the PLC in monitor mode. Otherwise, communication will not work properly.

5.3.6 When Connected to Modbus

For GT01, GT11 and GT21

Code No.	Content	Cause and solution
ERFF	Time up error There is no response from the PLC.	1) PLC connection cable is disconnected. Check the wiring of the connection cable and check for disconnection. 2) It is a temporary error caused by noise, etc. Turn on the power supplies for PLC or GT again.
ERFE	Response error There is an abnormal response returned from the external device.	Check the data to be returned from the external device.

For GT02, GT02L, GT03-E, GT05, GT12, GT32 and GT32-E

Code No.	Content	Cause and solution
**0001	Time up error There is no response from the PLC.	1) PLC connection cable is disconnected. Check the wiring of the connection cable and check for disconnection. 2) It is a temporary error caused by noise, etc. Turn on the power supplies for PLC or GT again.
**ERFE	Response error There is an abnormal response returned from the external device.	Check the data to be returned from the external device.

5.3.7 When Connected to a PLC Made by Toshiba Machine Co., Ltd.

For GT02, GT02L, GT03-E, GT05, GT12, GT32 and GT32-E

Code No.	Content	Cause and solution
ERFFFE	Parameter error	The specified parameter does not exist, or it cannot be used.

5.3.8 When Performing General-purpose Serial Communication

For GT01, GT11 and GT21

Error code	Error name	Measures
ER00	BCC error	The value of BCC may be incorrect. Check if there is no calculation mistake.
ER01	Format error	A command format may be incorrect. Check if it is correct.
ER02	NOT supported error	A command used is not supported with the version of the GT. Upgrade the version of the GT, or use another command.
ER03	Address error	The address specified does not exist in the GT. Check the address of the transmitted command.
ER04	Receive buffer overflow	The sent command exceeds the receivable number of bytes. Check the number of bytes of the sent command.
ER05	Requested overflow	The sent readout command exceeds the number of bytes that can send back. Check the number of the read words.
ER06	Data error	The communication condition for the GT may be unmatched with the condition for a destination device. Check the communication conditions.
ER07	Data write inhibit error	A command for the address that writing is not available was sent. Check the address of the sent command.

For GT02, GT02, GT03-E, GT05, GT12, GT32 and GT32-E

Error code	Error name	Measures
**0000	BCC error	The value of BCC may be incorrect. Check if there is no calculation mistake.
**0001	Format error	A command format may be incorrect. Check if it is correct.
**0002	NOT supported error	A command used is not supported with the version of the GT. Upgrade the version of the GT, or use another command.
**0003	Address error	The address specified does not exist in the GT. Check the address of the transmitted command.
**0004	Receive buffer overflow	The sent command exceeds the receivable number of bytes. Check the number of bytes of the sent command.
**0005	Requested overflow	The sent readout command exceeds the number of bytes that can send back. Check the number of the read words.
**0006	Data error	The communication condition for the GT may be unmatched with the condition for a destination device. Check the communication conditions.
**0007	Data write inhibit error	A command for the address that writing is not available was sent. Check the address of the sent command.

Chapter 6

Specifications

6.1 GT01

6.1.1 General Specifications

Item	Specifications			
	AIGT0030B AIGT0030H AIGT0130B AIGT0130H AIGT0230B AIGT0230H	**AIGT0032B AIGT0032H AIGT0132B AIGT0132H AIGT0232B AIGT0232H**	**AIGT0030B1 AIGT0030H1 AIGT0130B1 AIGT0130H1 AIGT0230B1 AIGT0230H1**	**AIGT0032B1 AIGT0032H1 AIGT0132B1 AIGT0132H1 AIGT0232B1 AIGT0232H1**
Rated voltage	24 V DC		5 V DC	
Operating voltage range	21.6 to 26.4 V DC		4.5 to 5.5 V DC	
Power consumption	2 W or less (80 mA or less)		1W or less (200 mA or less) Note1)	1.1 W or less (220 mA or less) Note1)
Ambient temperature	0 to +50 °C			
Ambient humidity	20 to 85% RH (at 25 °C), non-condensing			
Storage temperature	-20 to +60 °C			
Storage humidity	10 to 85% RH (at 25 °C), non-condensing			
Breakdown voltage	Between [power supply terminals] and [case] 500 V AC for 1 minute, Cutoff current 10mA (at default setting)			
Insulation resistance	Between [power supply terminals] and [case] 100 MΩ or more, 500 V DC, measured with megohmmeter (at default setting)			
Vibration resistance	10 to 55 Hz (1-minute cycle) Amplitude: 0.75 mm, 10 min on 3 axes			
Shock resistance	98 m/s^2 or more, 4 times on 3 axes			
EMC Directive applicable	EMC Directive: EN61000-6-2, EN61000-6-4			Not applicable
Noise immunity	1000 V [P-P] or more, Pulse width 50 ns, 1μs between power supply terminals (based on in-house measurements) Note2)			
Protective construction	IP65 (Initial value, evaluated by us) Dustproof and drip-proof from front panel only (packing used on panel contact surface) Note3)			
Weight	Approx. 160 g			

Note1) When supplying the power from the TOOL port of a PLC (CPU unit), confirm the PLC restrictions such as the power supply capacity before use.

Note2) When using our exclusive cable (24 V DC) and the ferrite core attached to the cable (5 V DC).

Note3) When reattaching, replace waterproof packing.

6.1.2 Performance Specifications (GT01)

Item		Specifications		
		AIGT0030B1 AIGT0030H1 AIGT0030B AIGT0030H AIGT0032B1 AIGT0032H1 AIGT0032B AIGT0032H	**AIGT0130B1 AIGT0130H1 AIGT0130B AIGT0130H AIGT0132B1 AIGT0132H1 AIGT0132B AIGT0132H**	**AIGT0230B1 AIGT0230H1 AIGT0230B AIGT0230H AIGT0232B1 AIGT0232H1 AIGT0232B AIGT0232H**
Display	Display device	STN monochrome LCD		
	Resolution	128 (W) x 64 (H) dots		
	Displayable area	70.38 (W) x 35.18 (H) mm		
	Backlight	3-color LED backlight (green, orange, red)	1-color LED backlight (white)	3-color LED backlight (white, pink, red)
	Backlight brightness	Backlight brightness can be adjusted on the menu screen or GTWIN configuration settings. (There are some minor variations in the backlight brightness.)		
	Contrast	Can be adjusted on the menu screen or GTWIN configuration settings.		
Touch switches	Touch switch	Analog touch switch (resistive film type)		
	Touch switch operation	0.5 N or less		
	Life	1 million times or more (at 25 °C) Note1)		
Memory	F-ROM	Screen data (base, keyboard), Flow display data: 384 kbytes Note2)		

Note1) The touch position may shift due to aging variation. If the touch position has shifted greatly, please adjust it.

6.1.3 Function Specifications (GT01)

Item	Specifications
Displayable fonts	Fixed (GTWIN): 1/4 width (8 x 8), half width (16 x 8), full width (16 x 16) (Double or quadruple in height and width) True Type (GTWIN): 10 to 64 dots Windows (R): 10 to 64 dots
Character types	English, Japanese, Korean, German, French, Italian, Spanish, Simplified Chinese, Traditional Chinese characters and Turkish can be displayed.
Number of registerable screens	160 screens Note1)
Registerable screen number	Base screen: No. 0 to 3FF Keyboard screen: No. 0 to 7
Graphics	Straight lines, continuous straight lines, squares, circles, ovals, arcs, elliptic arcs, fan shapes, elliptic fan shapes, beveled squares
Types of parts	Switch Function switch Lamp Message Data Bar graph Clock Note2) Line graph Keyboard Custom(message, lamp, switch)
Main functions Note3)	Recipe Flow display Write device Multi language exchange
Through function	Connecting a computer to TOOL port and our PLC to COM port enables the communication between the PLC and the computer.
Copy function *5	The screen data can be copied by connecting the main units with a cable.
GTWIN ver.	Ver. 2.30 or later

Note1) Maximum allowable number varies depending on registered contents.

Note2) A clock part can be indicated by referring to external clock data. Clock function is not equipped in GT01.

Note3) It depends on the version of GT.

6.1.4 Interface Specifications (GT01)

Interface for connecting PLC/External devices
- COM port

Item		Specifications		
		AIGT0030B1/AIGT0030H1 AIGT0030B/AIGT0030H AIGT0130B1/AIGT0130H1 AIGT0130B/AIGT0130H AIGT0230B1/AIGT0230H1 AIGT0230B/AIG0230H	AIGT0032B1 AIGT0032H1 AIGT0132B1 AIGT0132H1 AIGT0232B1 AIGT0232H1	AIGT0032B AIGT0032H AIGT0132B AIGT0132H AIGT0232B AIGT0232H
			5 VDC	24 VDC
Communication standard		Conforms to RS232C (Non insulation type)	Conforms to RS422 (Non insulation type)	
Communication condition with external devices	Baud rate (bit/s)	9600, 19200, 38400, 57600, 115200 bps		
	Data length (bit)	7, 8		
	Parity	None, Odd, Even		
	Stop bit (bit)	1		
Transmission distance (Total length)		Max. 15 m (Baud rate: 19,200 bit/s)	Max. 30 m (Baud rate: 115,200 bit/s)	Max. 500 m (Baud rate: 115,200 bit/s)
Protocol		- MEWTOCOL (Protocol for PANASONIC PLC: FP series) - General-purpose serial (PANASONIC dedicated protocol) - Other companies' PLC protocols (For the details, refer to the latest GTWIN HELP.)		
Connector		Connector terminal base (8-pin) Note1) 2) 3)		

Note1) The (+) and (-) terminals are the power supply terminals for driving the main unit.
Note2) Regarding power supply voltage, please pay due consideration to the cable length so that the applied voltage is within the operation voltage range.
Note3) When supplying power from a power supply separate from the PLC, make sure the power cable is no longer than 10 m. (5 V DC type only)

Interface for transferring screen data
- TOOL port

Item		Specifications
Communication standard		Conforms to RS232C (Non insulation type)
Conditions for communications with GTWIN	Baud rate (bit/s)	9600, 19200, 115200, 230400 bps Note1) 2)
	Data length (bit)	8
	Parity	None, Odd, Even
	Stop bit (bit)	1
Protocol		GT dedicated protocol
Connector		Mini-DIN (5-pin)

Note1) The baud rate of 230400 bps is available when the USB/RS232C conversion cable is used.
Note2) When the baud rate is set to 230400 bps, the connection using the GTWIN automatic communication setting function is not possible. Set the GTWIN communication setting to 230400 bps, and then transfer data.

6.2 GT02

6.2.1 General Specifications (GT02)

Item	Specifications	
	24 V DC type	5 V DC
Rated voltage	24 V DC	5 V DC
Operating voltage range	21.6 to 26.4 V DC	4.5 to 5.5 V DC
Power consumption	1.9 W or less (80 mA or less)	1W or less (200 mA or less) Note1)
Ambient temperature	0 to +50 °C	
Ambient humidity	20 to 85% RH (at 25 °C), non-condensing	
Storage temperature	-20 to +60 °C	
Storage humidity	10 to 85% RH (at 25 °C), non-condensing	
Breakdown voltage	Between [power supply terminals] and [case] 500 V AC for 1 minute, Cutoff current 10mA (at default setting)	
Insulation resistance	Between [power supply terminals] and [case] 100 MΩ or more, 500 V DC, measured with megohmmeter (at default setting)	
Vibration resistance	5 to 8.4 Hz half amplitude 3.5 mm, 8.4 to 150 Hz acceleration 9.8 m/s^2, 10 sweeps each in X, Y and Z directions (1 octave/min)	
Shock resistance	147 m/s^2, 3 times on 3 axes	
EC Directive applicable	EN61131-2 (EMC Directive)	
Noise immunity	1000 V [P-P] or more, Pulse width 50 ns, 1μs between power supply terminals (based on in-house measurements) Note2)	
Protective construction	IP67 (Initial value, evaluated by us) Dustproof and drip-proof from front panel only (packing used on panel contact surface) Note3)	
Weight	Approx. 170 g	

Note1) When supplying the power from the TOOL port of a PLC (CPU unit), confirm the PLC restrictions such as the power supply capacity before use.

Note2) When using our exclusive cable.

Note3) When reattaching, replace waterproof packing.

6.2.2 Performance Specifications (GT02)

Item		Specifications	
		GT02M	GT02G
Display	Display device	STN monochrome LCD	
	Resolution	240 (W) x 96 (H) dots	
	Displayable area	88.5 (W) x 35.4 (H) mm	
	Backlight	3-color LED backlight (white, pink, red)	3-color LED backlight (green, orange, red)
	Backlight brightness	Backlight brightness can be adjusted on the menu screen or GTWIN configuration settings. (There are some minor variations in the backlight brightness.)	
	Contrast	Contrast can be adjusted on the menu screen.	
Touch switches	Touch switch	Analog touch switch (resistive film type)	
	Touch switch operation	0.8 N or less	
	Life	1 million times or more (at 25 °C) Note1)	
Memory	F-ROM	Screen data (base, keyboard, login), Flow display data, FP monitor screen data: 2048 kbytes Note2) Recipe data: 64 k bytes Write device data: 64 kbytes	
	SRAM Note2)	Alarm history + Line graph sampling (27.5 kbytes) Logging data of Logging function (64 kbytes) Hold GT Device (2048 + 255 words) Hold PLC Device (24 words)	
Battery Note3)	Backup	Built-in clock data Alarm history data Line graph sampling data Logging data of Logging function Internal device hold data Hold PLC Device data	
	Life	Approx. 5 years (at 25 °C)	

Note1) The touch position may shift due to aging variation. If the touch position has shifted greatly, please adjust it.

Note2) It is available for GT02M2/GT02G2 only. A battery is necessary for SRAM backup.
The unused part of 27 kbytes for Alarm history and line graph sampling can be used for the logging function.

Note3) It is available for GT02M2/GT02G2 only. Please purchase a battery separately.
The battery life is the value when no power at all is supplied. The actual lifetime may be shorter according to the condition of use.

6.2.3 Function Specifications (GT02)

Item	Specifications
Displayable fonts	Fixed (GTWIN): 1/4 width (8 x 8), half width (16 x 8), full width (16 x 16) (Double, quadruple or octuple in height and width) True Type (GTWIN): 10 to 96 dots Windows (R): 10 to 96 dots
Character types	English, Japanese, Korean, German, French, Italian, Spanish, Simplified Chinese, Traditional Chinese characters and Turkish can be displayed.
Number of registerable screens	250 screens Note1)
Registerable screen number	Base screen: No. 0 to 3FF Keyboard screen: No. 0 to 7 Login screen: No. 0 to F
Graphics	Straight lines, continuous straight lines, squares, circles, ovals, arcs, elliptic arcs, fan shapes, elliptic fan shapes, beveled squares
Types of parts	Switch Function switch Lamp Message Data Bar graph Clock Note2) 3) Line graph Alarm list Keyboard Custom(message, lamp, switch)
Main functions Note4)	Recipe SD recipe Note5), Flow display Write device Multi language exchange Operation security GT link PLC multiple connection Data logging Note5) FP monitor
Through function	Connecting a computer to USB port and our PLC to COM port enables the communication between the PLC and the computer.
Copy function Note5)	Screen data can be copied with a SD memory card.
GTWIN ver.	Ver. 2.A0 or later

Note1) Maximum allowable number varies depending on registered contents.
Note2) External clock data can be referred and displayed.
Note3) Accuracy of the GT internal clock is ±180 seconds per month.
Note4) It depends on the version of GT.
Note5) It is available for GT02M2 and GT02G2 only.

6.2.4 Interface Specifications (GT02)

Interface for connecting PLC/External devices
- COM port

Item		Specifications	
		RS232C type	RS422/RS485 type
Communication standard		Conforms to RS232C (Non insulation type)	Conforms to RS422 (Non insulation type)
Communication condition with external devices	Baud rate (bit/s)	9600, 19200, 38400, 57600, 115200 bps	
	Data length (bit)	7, 8	
	Parity	None, Odd, Even	
	Stop bit (bit)	1	
Transmission distance (Total length)		Max. 15 m (Baud rate: 19200 bit/s)	Max. 500 m (Baud rate: 115200 bit/s)
Terminal resistance value		—	120 Ω
Protocol		- MEWTOCOL (Protocol for PANASONIC PLC: FP series) - General-purpose serial (PANASONIC dedicated protocol) - Protocol for other companies' PLCs (For the details, refer to the latest GTWIN HELP.)	
Connector		Connector terminal base (8-pin) Note1) 2) 3)	

Note1) It is internally isolated from the input power supply side (between +24V and 0V).
Note2) The (+) and (-) terminals are the power supply terminals for driving the main unit.
Note3) Regarding power supply voltage, please pay due consideration to the cable length so that the applied voltage is within the operation voltage range.

Interface for transferring screen data
- TOOL port

Item	Specifications
Communication standard	USB1.1
Connector shape Note1)	USB MiniB type 5pin (Male)
Trasmission distance	Max. 5 m
No. of connected unit with PC	1 unit

Note1) Take care of handling of the connector not to add an excessive static electricity on the metal part of the connector.

SD memory card slot (For GT02M2/GT02G2 only)

Item	Specifications
Support media	SD memory card, SDHC memory card Note1)
Supported format standard	Conforms to SD standard Note2)

Note1) The manufacturer name that the operation check has done: Panasonic Corporation
Note2) Please format with a format software for SD memory cards.
Note3) The SD access lamp turns on while accessing the SD memory card.

6.3 GT02L

6.3.1 General Specifications (GT02L)

Item	Specifications
Rated voltage	5 V DC
Operating voltage range	4.5 to 5.5 V DC
Power consumption	1W or less (200 mA or less) Note1)
Ambient temperature	0 to +50 °C
Ambient humidity	20 to 85% RH (at 25 °C), non-condensing
Storage temperature	-20 to +60 °C
Storage humidity	10 to 85% RH (at 25 °C), non-condensing
Breakdown voltage	Between [power supply terminals] and [case] 500 V AC for 1 minute, Cutoff current 10mA (at default setting)
Insulation resistance	Between [power supply terminals] and [case] 100 MΩ or more, 500 V DC, measured with megohmmeter (at default setting)
Vibration resistance	5 to 8.4 Hz half amplitude 3.5 mm, 8.4 to 150 Hz acceleration 9.8 m/s^2, 10 sweeps each in X, Y and Z directions (1 octave/min)
Shock resistance	147 m/s^2, 3 times on 3 axes
EC Directive applicable	EN61131-2 (EMC Directive)
Noise immunity	1000 V [P-P] or more, Pulse width 50 ns, 1μs between power supply terminals (based on in-house measurements) Note2)
Protective construction	IP65 (Initial value, evaluated by us) Dustproof and drip-proof from front panel only (packing used on panel contact surface) Note3)
Weight	Approx. 150 g

Note1) When supplying the power from the TOOL port of a PLC (CPU unit), confirm the PLC restrictions such as the power supply capacity before use.

Note2) When using our exclusive cable.

Note3) When reattaching, replace waterproof packing.

6.3.2 Performance Specifications (GT02L)

Item		Specifications
Display	Display device	STN monochrome LCD
	Resolution	160 (W) x 64 (H) dots
	Displayable area	88.0 (W) x 35.2 (H) mm
	Backlight	LED backlight (white)
	Backlight brightness	Backlight brightness can be adjusted on the menu screen or GTWIN configuration settings. (There are some minor variations in the backlight brightness.)
	Contrast	Contrast can be adjusted on the menu screen.
Touch switches	Touch switch	Analog touch switch (resistive film type)
	Touch switch operation	0.8 N or less
	Life	1 million times or more (at 25 °C) Note1)
Memory	F-ROM	Screen data (base, keyboard, login), Flow display data, FP monitor screen data: 640 kbytes Recipe data: 64 k bytes Write device data: 64 kbytes

Note1) The touch position may shift due to aging variation. If the touch position has shifted greatly, please adjust it.

6.3.3 Function Specifications (GT02L)

Item	Specifications
Displayable fonts	Fixed (GTWIN): 1/4 width (8 x 8), half width (16 x 8), full width (16 x 16) (Double, quadruple or octuple in height and width) True Type (GTWIN): 10 to 64 dots Windows (R): 10 to 64 dots
Character types	English, Japanese, Korean, German, French, Italian, Spanish, Simplified Chinese, Traditional Chinese characters and Turkish can be displayed.
Number of registerable screens	80 screens Note1)
Registerable screen number	Base screen: No. 0 to 3FF Keyboard screen: No. 0 to 7 Login screen: No. 0 to F
Graphics	Straight lines, continuous straight lines, squares, circles, ovals, arcs, elliptic arcs, fan shapes, elliptic fan shapes, beveled squares
Types of parts	Switch Function switch Lamp Message Data Bar graph Clock Note2) Line graph Alarm list Keyboard Custom(message, lamp, switch)
Main functions Note3)	Recipe Flow display Write device Multi language exchange Operation security GT link PLC multiple connection FP monitor
Through function	Connecting a computer to USB port and our PLC to COM port enables the communication between the PLC and the computer.
GTWIN ver.	Ver. 2.B0 or later

Note1) Maximum allowable number varies depending on registered contents.
Note2) External clock data can be referred and displayed.
Note3) It depends on the version of GT.

6.3.4 Interface Specifications (GT02L)

Interface for connecting PLC/External devices
- COM port

Item		Specifications	
		RS232C type	RS422/RS485 type
Communication standard		Conforms to RS232C (Non insulation type)	Conforms to RS422 (Non insulation type)
Communication condition with external devices	Baud rate (bit/s)	9600, 19200, 38400, 57600, 115200 bps	
	Data length (bit)	7, 8	
	Parity	None, Odd, Even	
	Stop bit (bit)	1	
Transmission distance (Total length)		Max. 15 m (Baud rate: 19200 bit/s)	Max. 500 m (Baud rate: 115200 bit/s)
Terminal resistance value		—	120 Ω
Protocol		- MEWTOCOL (Protocol for PANASONIC PLC: FP series) - General-purpose serial (PANASONIC dedicated protocol) - Protocol for other companies' PLCs (For the details, refer to the latest GTWIN HELP.)	
Connector		Connector terminal base (8-pin) Note1) 2) 3)	

Note1) The (+) and (-) terminals are the power supply terminals for driving the main unit.
Note2) Regarding power supply voltage, please pay due consideration to the cable length so that the applied voltage is within the operation voltage range.
Note3) When tightening the terminal block requires a flat-blade screwdriver with a blade size of 0.4 x 2.5 or special screwdriver (part No.: AFP0806). Set the tightening torque between 0.22 Nm to 0.25 Nm.

Applicable wire	Size	Nominal cross-sectional area
	AWG#28 to 16	0.08 to 1.25mm^2

Interface for transferring screen data
- USB port

Item	Specifications
Communication standard	USB1.1
Connector shape Note1)	USB MiniB type 5pin (Male)
Trasmission distance	Max. 5 m
No. of connected unit with PC	1 unit

Note1) Take care of handling of the connector not to add an excessive static electricity on the metal part of the connector.

6.4 GT03-E

6.4.1 General Specifications (GT03-E)

Item	Specifications	
	GT03M-E	GT03T-E
Rated voltage	24 V DC	
Operating voltage range	21.6 to 26.4 V DC	
Power consumption	1.9 W or less (80 mA or less)	3.1 W or less (130 mA or less)
Ambient temperature	-20 to +60 °C Note1)	
Ambient humidity	20 to 85% RH (at 25 °C), non-condensing	
Storage temperature	-20 to +60 °C	
Storage humidity	10 to 95% RH (at 25 °C), non-condensing	
Breakdown voltage	Between [power supply terminals] and [case] 500 V AC for 1 minute, Cutoff current 10mA (at default setting)	
Insulation resistance (Operating voltage: 500 V DC)	Between [power supply terminals] and [case] 100 MΩ or more (at default setting)	
Vibration resistance	Conforms to JISB3502 and IEC61131-2. 5 to 8.4 Hz half amplitude 3.5 mm 8.4 to 150 Hz, Acceleration 9.8 m/s^2 10 sweeps each in X, Y and Z directions (1 octave/min)	
Shock resistance	Conforms to JISB3502 and IEC61131-2. 147 m/s^2 3 times on 3 axes	
EU Directive applicable	EN61131-2 (EMC Directive)	
Noise immunity	1000 V [P-P] or more, Pulse width 50 ns, 1μs between power supply terminals (based on in-house measurements) Note2)	
Electrostatic discharge resistance	6 kV (Contact discharge, IEC61000-4-2 Level 3)	
Protective construction	IP67 (Initial value, evaluated by us) Dustproof and drip-proof from front panel only (packing used on panel contact surface) Note3)	
Weight	Approx. 170 g	

Note1) When it is installed in horizontal orientation (installed to make the liquid crystal face be topside), installed upright in vertical orientation or when using a battery, the usable range is -20 to +55 °C.
Note2) When using our exclusive cable.
Note3) When reattaching, replace waterproof packing.

6.4.2 Performance Specifications (GT03-E)

Item		Specifications	
		GT03M-E	GT03T-E
Display Note1)	Display device	TFT monochrome LCD	TFT color LCD
	Resolution	320 (W) x 240 (H) dots	
	Displayable area	70.6 (W) x 52.9 (H) mm	
	Backlight	1-color LED backlight (white)	
	Backlight brightness	Can be adjusted on the menu screen, GTWIN configuration settings or PLC. (There are some minor variations in the backlight brightness.)	
Touch switches	Touch switch	Analog touch switch (resistive film type)	
	Touch switch operation	0.8 N or less	
	Life	1 million times or more (at 25 °C) Note2)	
Memory	F-ROM	Screen data (base, keyboard, login), Flow display data, FP monitor screen data: 6144 kbytes	Screen data (base, keyboard, login), Flow display data, FP monitor screen data: 12288 kbytes
		Recipe data: 64 k bytes Write device data: 64 kbytes	
	SRAM Note3)	-	Alarm history + Line graph sampling (27.5 kbytes) Logging data of Logging function (64 kbytes) Hold GT Device (2048 + 255 words) Hold PLC Device (24 words)
Battery Note4) 5)	Backup	-	Built-in clock data Alarm history data Line graph sampling data Logging data of Logging function Internal device hold data Hold PLC Device data
	Life	-	Approx. 3 years (at 25 °C)

Note1) On the LCD panel, bright spots (points always lit) or black spots (points always unlit) may appear, or the uneven brightness, flickers or crosstalk (appearance of unintended shades in the area no graphic or part is arranged) may occur depending on the operating conditions. Note that these phenomena are resulted from the basic characteristics of LCD panel not defects or failures of the product.

Note2) The touch position may shift due to aging variation. If the touch position has shifted greatly, please adjust it.

Note3) A battery is necessary for SRAM backup.

Note4) Please purchase a battery separately.
The battery life is the value when no power at all is supplied. The actual lifetime may be shorter according to the condition of use.

Note5) The usable range for using a battery is -20 to +55 °C.

6.4.3 Function Specifications (GT03-E)

Item	Specifications	
	GT03M-E	GT03T-E
Displayable fonts	Fixed (GTWIN): 1/4 width (8 x 8), half width (16 x 8), full width (16 x 16) (Double, quadruple or octuple in height and width) True Type (GTWIN): 10 to 240 dots Windows (R): 10 to 240 dots	
Character types	English, Japanese, Korean, German, French, Italian, Spanish, Simplified Chinese, Traditional Chinese characters, Turkish, Russian and Vietnamese can be displayed.	
Number of registerable screens Note1)	Approx. 230 screens	Approx. 180 screens
Registerable screen number	Base screen: No. 0 to 3FF Keyboard screen: No. 0 to 7 Login screen: No. 0 to F	
Graphics	Straight lines, continuous straight lines, squares, circles, ovals, arcs, elliptic arcs, fan shapes, elliptic fan shapes, beveled squares	
Types of parts	Switch Function switch Lamp Message Data Bar graph Clock Note2) Note3) Line graph Alarm list Keyboard Custom(message, lamp, switch)	Switch Function switch Lamp Message Data Bar graph Clock Note2) Note3) Line graph Alarm list Alarm hisoty Note5) Keyboard Custom(message, lamp, switch)
Main functions Note4)	Recipe Flow display Write device Multi language exchange Operation security GT link PLC multiple connection	Recipe SD recipe Note5) Flow display Write device Multi language exchange Operation security GT link PLC multiple connection Logging function Note5)
Through function	Connecting a computer to USB port and our PLC to COM port enables the communication between the PLC and the computer.	
Copy function	-	Screen data can be copied with a SD memory card.
GTWIN ver.	Ver. 2.E1 or later	

Note1) Maximum allowable number varies depending on registered contents.
Note2) External clock data can be referred and displayed.
Note3) Accuracy of the GT internal clock is ±90 seconds per month (at 25°C). Periodically set the clock to the right time for the system in which clock error is a problem. (GT03T-E only)
Note4) It depends on the version of GT.

6.4.4 Interface Specifications (GT03-E)

Interface for connecting PLC/External devices
- COM port

Item		Specifications	
		AIG03MQ03DE **AIG03TQ13DE**	**AIG03MQ05DE** **AIG03TQ15DE**
Communication standard		Conforms to RS232C (Non insulation type)	Conforms to RS422 (Non insulation type)
Communication condition with external devices	Baud rate (bit/s)	9600, 19200, 38400, 57600, 115200 bps	
	Data length (bit)	7, 8	
	Parity	None, Odd, Even	
	Stop bit (bit)	1	
Transmission distance (Total length)		Max. 15 m (Baud rate: 19200 bit/s)	Max. 500 m (Baud rate: 115200 bit/s)
Protocol		- MEWTOCOL (Protocol for our PLC: FP series) - General-purpose serial (PANASONIC dedicated protocol) - Other companies' PLC protocols (For the details, refer to the latest GTWIN HELP.)	
Connector		Connector terminal base (8-pin) Note1) 2) 3)	

Note1) The (+) and (-) terminals are the power supply terminals for driving the main unit.
Note2) Regarding power supply voltage, please pay due consideration to the cable length so that the applied voltage is within the operation voltage range.
Note3) When tightening the terminal block requires a flat-blade screwdriver with a blade size of 0.4 x 2.5 or special screwdriver (part No.: AFP0806). The tightening torque should be 0.22 to 0.3 N·m.

Applicable wire	Size	Nominal cross-sectional area	Rated temperature
	AWG#28 to 16	0.08 to 1.25mm2	60 °C

Interface for transferring screen data
- USB port

Item	Specifications
Communication standard	USB1.1
Connector shape Note1)	TYPE-B
Trasmission distance	USB MiniB type 5pin (Male)
No. of connected unit with PC	1 unit

Note1) Take care of handling of the connector not to add an excessive static electricity on the metal part of the connector.

SD memory card slot

Item	Specifications
Support media	SD memory card, SDHC memory card Note1)
Supported format standard	Conforms to SD standard Note2)

Note1) The manufacturer name that the operation check has done: Panasonic Corporation
Check the usable temperature range of a SD memory card to be used before use.
Note2) Please format with a format software for SD memory cards.

6.5 GT05

6.5.1 General Specifications

Item	Specifications	
	GT05S	GT05M/GT05G
Rated voltage	24 V DC	
Operating voltage range	21.6 to 26.4 V DC	
Power consumption	3.6 W or less (150 mA or less)	2.4 W or less (100 mA or less)
Insulation method of power supply part	Transformer insulation	
Ambient temperature	0 to +50 °C	
Ambient humidity	20 to 85% RH (at 25 °C), non-condensing	
Storage temperature	-20 to +60 °C	
Storage humidity	10 to 85% RH (at 25 °C), non-condensing	
Breakdown voltage Note1)	Between [power supply terminals] and [case] 500 V AC for 1 minute, Cutoff current 10mA (at default setting)	
Insulation resistance Note1)	Between [power supply terminals] and [case] 100 MΩ or more, 500 V DC, measured with megohmmeter (at default setting)	
Vibration resistance	10 to 55 Hz (1-minute cycle) Amplitude: 0.75 mm, 10 min on 3 axes	
Shock resistance	98 m/s^2 or more, 4 times on 3 axes	
EC Directive applicable	EN61131-2 (EMC Directive)	
Noise immunity	1000 V [P-P] or more, Pulse width 50 ns, 1μs between power supply terminals (based on in-house measurements) Note2)	
Protective construction	IP65 (Initial value, evaluated by us) Dustproof and drip-proof from front panel only (packing used on panel contact surface) Note3)	
Weight	Approx. 230 g	

Note1) Not isolated between the USB port, COM. port and the internal digital circuit.
Note2) When using our exclusive cable.
Note3) When reattaching, replace waterproof packing.

6.5.2 Performance Specifications (GT05)

Item		Specifications		
		GT05S	GT05M	GT05G
Display	Display device	4096-color STN color LCD	STN monochrome LCD	
	Resolution	320 (W) x 240 (H) dots		
	Displayable area	71.02 (W) x 53.26 (H) mm		
	Backlight	1-color LED backlight (white)	3-color LED backlight (white, pink, red)	3-color LED backlight (green, orange, red)
	Backlight brightness	Backlight brightness can be adjusted on the menu screen or GTWIN configuration settings. (There are some minor variations in the backlight brightness.)		
	Contrast	Contrast can be adjusted on the menu screen.		
Touch switches	Touch switch	Analog touch switch (resistive film type)		
	Touch switch operation	0.8 N or less		
	Life	1 million times or more (at 25 °C) Note1)		
Memory	F-ROM	Screen data (base, keyboard, login), Flow display data, FP monitor screen data: 12288 kbytes	Screen data (base, keyboard, login), Flow display data, FP monitor screen data: 2048 kbytes	
		Recipe data: 64 k bytes Write device data: 64 kbytes		
	SRAM Note2)	Alarm history + Line graph sampling (27.5 kbytes) Logging data of Logging function (64 kbytes) Hold GT Device (2048 + 255 words) Hold PLC Device (24 words)		
Battery Note3)	Backup	Built-in clock data Alarm history data Line graph sampling data Logging data of Logging function Internal device hold data Hold PLC Device data		
	Life	Approx. 3 years (at 25 °C)	Approx. 5 years (at 25 °C)	

Note1) The touch position may shift due to aging variation. If the touch position has shifted greatly, please adjust it.

Note2) A battery is necessary for SRAM backup.
The unused part of 27 kbytes for Alarm history and line graph sampling can be used for the logging function.

Note3) Please purchase a battery separately.
The battery life is the value when no power at all is supplied. The actual lifetime may be shorter according to the condition of use.

6.5.3 Function Specifications (GT05)

Item	Specifications	
	GT05S	GT05M/GT05G
Displayable fonts	Fixed (GTWIN): 1/4 width (8 x 8), half width (16 x 8), full width (16 x 16) (Double, quadruple or octuple in height and width) True Type (GTWIN): 10 to 240 dots Windows (R): 10 to 240 dots	
Character types	English, Japanese, Korean, German, French, Italian, Spanish, Simplified Chinese, Traditional Chinese characters and Turkish can be displayed.	
Number of registerable screens	Approx. 180 screens Note1)	Approx. 240 screens Note1)
Registerable screen number	Base screen: No. 0 to 3FF Keyboard screen: No. 0 to 7 Login screen: No. 0 to F	
Graphics	Straight lines, continuous straight lines, squares, circles, ovals, arcs, elliptic arcs, fan shapes, elliptic fan shapes, beveled squares	
Types of parts	Switch Function switch Lamp Message Data Bar graph Clock Note2) 3) Line graph Alarm list Keyboard Custom(message, lamp, switch)	
Main functions Note4)	Recipe SD recipe Flow display Write device Multi language exchange Operation security GT link PLC multiple connection Data logging FP monitor	
Through function	Connecting a computer to USB port and our PLC to COM port enables the communication between the PLC and the computer.	
Copy function	Screen data can be copied with a SD memory card.	
GTWIN ver.	Ver. 2.90 or later	

Note1) Maximum allowable number varies depending on registered contents.
Note2) External clock data can be referred and displayed.
Note3) Accuracy of the GT internal clock is ±180 seconds per month.
Note4) It depends on the version of GT.

6.5.4 Interface Specifications (GT05)

Interface for connecting PLC/External devices
- COM port

Item		Specifications	
		AIG05MQ02D/AIG05MQ03D AIG05GQ02D/AIG05GQ03D AIG05SQ02D/AIG05SQ03D	AIG05MQ04D/AIG05MQ05D AIG05GQ04D/AIG05GQ05D AIG05SQ04D/AIG05SQ05D
Communication standard		Conforms to RS232C (Non insulation type) Note1)	Conforms to RS422 (Non insulation type) Note1)
Communication condition with external devices	Baud rate (bit/s)	9600, 19200, 38400, 57600, 115200 bps	
	Data length (bit)	7, 8	
	Parity	None, Odd, Even	
	Stop bit (bit)	1	
Transmission distance (Total length)		Max. 15 m (Baud rate: 19200 bit/s)	Max. 500 m (Baud rate: 115200 bit/s)
Protocol		- MEWTOCOL (Protocol for PANASONIC PLC: FP series) - General-purpose serial (PANASONIC dedicated protocol) - Other companies' PLC protocols (For the details, refer to the latest GTWIN HELP.)	
Connector		Connector terminal base (8-pin) Note2) 3)	

Note1) It is internally isolated from the input power supply side (between +24V and 0V).
Note2) The (+) and (-) terminals are the power supply terminals for driving the main unit.
Note3) Regarding power supply voltage, please pay due consideration to the cable length so that the applied voltage is within the operation voltage range.

Interface for transferring screen data
- USB port

Item	Specifications
Communication standard	USB1.1
Connector shape Note1)	TYPE-B
Trasmission distance	Max. 5 m
No. of connected unit with PC	1 unit

Note1) Take care of handling of the connector not to add an excessive static electricity on the metal part of the connector.

SD memory card slot

Item	Specifications
Support media	SD memory card, SDHC memory card Note1)
Supported format standard	Conforms to SD standard Note2)

Note1) The manufacturer name that the operation check has done: Panasonic Corporation
Usable capacity of a SD memory card varies according to the version of GT firmware.
Note2) Please format with a format software for SD memory cards.
Note3) The SD access lamp turns on while accessing the SD memory card.

6.6 GT11

6.6.1 General Specifications (GT11)

Item	Specifications
Rated voltage	24 V DC
Operating voltage range	21.6 to 26.4 V DC
Power consumption	2.4 W or less (100 mA or less) Note1)
Ambient temperature	0 to +50 °C Note2)
Ambient humidity	20 to 85% RH (at 25 °C), non-condensing
Storage temperature	-20 to +60 °C
Storage humidity	10 to 85% RH (at 25 °C), non-condensing
Breakdown voltage	Between [power supply terminals] and [case] 500 V AC for 1 minute, Cutoff current 10mA (at default setting)
Insulation resistance	Between [power supply terminals] and [case] 100 MΩ or more, 500 V DC, measured with megohmmeter (at default setting)
Vibration resistance	10 to 55 Hz (1-minute cycle) Amplitude: 0.75 mm, 10 min on 3 axes
Shock resistance	98 m/s^2 or more, 4 times on 3 axes
EC Directive applicable	EMC Directive: EN61000-6-2, EN61000-6-4
Noise immunity	1000 V [P-P] or more, Pulse width 50 ns, 1μs between power supply terminals (based on in-house measurements) Note3)
Protective construction	IP65 (Initial value, evaluated by us) Dustproof and drip-proof from front panel only (packing used on panel contact surface) Note4)
Weight	Approx. 230 g

Note1) When connecting the FP programmer II to the TOOL port, it is 150 mA or less.
Note2) When connecting the FP programmer II or C-NET adapter to the TOOL port, the usable range is 0 to +45 °C.
Note3) When using our exclusive cable.
Note4) When reattaching, replace waterproof packing.

6.6.2 Performance Specifications (GT11)

Item		Specifications	
		AIGT2030B/AIGT2030H AIGT2032B/AIGT2032H	AIGT2130B/AIGT2130H AIGT2132B/AIGT2132H
Display	Display device	STN monochrome LCD	
	Resolution	240 (W) x 96 (H) dots	
	Displayable area	96.0 (W) x 35.4 (H) mm	
	Backlight	3-color LED backlight (green, orange, red)	1-color LED backlight (white)
	Backlight brightness	Can be set on the menu screen or GTWIN configuration settings. (There are some minor variations in the backlight brightness.)	
	Contrast	Can be adjusted on the menu screen or GTWIN configuration settings.	
Touch switches	Touch switch	Analog touch switch (resistive film type)	
	Touch switch operation	0.5 N or less	
	Life	1 million times or more (at 25 °C) Note1)	
Memory	F-ROM	Screen data (base, keyboard), Flow display data: 1408 kbytes Write device data: 64 kbytes	
	SRAM Note2)	Alarm history + Line graph sampling (27.5 kbytes) Hold GT Device (2048 + 255 words) Hold PLC Device (24 words)	
Battery Note3)	Backup	Built-in clock data Alarm history data Line graph sampling data Internal device hold data Hold PLC Device data	
	Life	Approx. 2 years (at 25 °C)	

Note1) The touch position may shift due to aging variation. If the touch position has shifted greatly, please adjust it.

Note2) A battery is necessary for SRAM backup.

Note3) Please purchase a battery separately.
The battery life is the value when no power at all is supplied. The actual lifetime may be shorter according to the condition of use.

6.6.3 Function Specifications (GT11)

Item	Specifications
Displayable fonts	Fixed (GTWIN): 1/4 width (8 x 8), half width (16 x 8), full width (16 x 16) (Double or quadruple in height and width) True Type (GTWIN): 10 to 96 dots Windows (R): 10 to 96 dots
Character types	English, Japanese, Korean, German, French, Italian, Spanish, Simplified Chinese, Traditional Chinese characters and Turkish can be displayed.
Number of registerable screens	250 screens Note1)
Registerable screen number	Base screen: No. 0 to 3FF Keyboard screen: No. 0 to 7
Graphics	Straight lines, continuous straight lines, squares, circles, ovals, arcs, elliptic arcs, fan shapes, elliptic fan shapes, beveled squares
Types of parts	Switch Function switch Lamp Message Data Bar graph Clock Note2) 3) Line graph Alarm list Alarm history Keyboard Custom(message, lamp, switch)
Main functions Note4)	Recipe Flow display Write device Multi language exchange
Through function	Connecting a computer to TOOL port and our PLC to COM port enables the communication between the PLC and the computer.
Copy function *5	The screen data can be copied by connecting the main units with a cable.
GTWIN ver.	Ver. 2.60 or later

Note1) Maximum allowable number varies depending on registered contents.
Note2) A clock part can be indicated by referring to external clock data.
Note3) Accuracy of the GT internal clock is ±100 seconds per month.
Note4) It depends on the version of GT.

6.6.4 Interface Specifications (GT11)

Interface for connecting PLC/External devices
- COM port

Item		Specifications	
		AIGT2030B/AIGT2030H AIGT2130B/AIGT2130H	**AIGT2032B/AIGT2032H AIGT2132B/AIGT2132H**
Communication standard		Conforms to RS232C (Non insulation type)	Conforms to RS422 (Non insulation type)
Communication condition with external devices	Baud rate (bit/s)	9600, 19200, 38400, 57600, 115200 bps	
	Data length (bit)	7, 8	
	Parity	None, Odd, Even	
	Stop bit (bit)	1	
Transmission distance (Total length)		Max. 15 m (Baud rate: 19200 bit/s)	Max. 500 m (Baud rate: 115200 bit/s)
Protocol		- MEWTOCOL (Protocol for PANASONIC PLC: FP series) - General-purpose serial (PANASONIC dedicated protocol) - Other companies' PLC protocols (For the details, refer to the latest GTWIN HELP.)	
Connector		Connector terminal base (8-pin) Note1) 2)	

Note1) The (+) and (-) terminals are the power supply terminals for driving the main unit.
Note2) Regarding power supply voltage, please pay due consideration to the cable length so that the applied voltage is within the operation voltage range.

Interface for transferring screen data
- TOOL port

Item		Specifications
Communication standard		Conforms to RS232C (Non insulation type)
Conditions for communications with GTWIN	Baud rate (bit/s)	9600, 19200, 115200, 230400 bps Note1) 2)
	Data length (bit)	8
	Parity	None, Odd, Even
	Stop bit (bit)	1
Protocol		GT dedicated protocol
Connector		Mini-DIN (5-pin)

Note1) The baud rate of 230400 bps is available when the USB/RS232C conversion cable is used.
Note2) When the baud rate is set to 230400 bps, the connection using the GTWIN automatic communication setting function is not possible. Set the GTWIN communication setting to 230400 bps, and then transfer data.

6.7 GT12

6.7.1 General Specifications (GT12)

Item	Specifications
Rated voltage	24 V DC
Operating voltage range	21.6 to 26.4 V DC
Power consumption	1.7 W or less (70 mA or less)
Insulation method of power supply part	Transformer insulation Note1)
Ambient temperature	0 to +50 °C
Ambient humidity	20 to 85% RH (at 25 °C), non-condensing
Storage temperature	-20 to +60 °C
Storage humidity	10 to 85% RH (at 25 °C), non-condensing
Breakdown voltage Note1)	Between [power supply terminals (+ and – terminals)] and [function earth terminal] 500 V AC for 1 minute, Cutoff current 10mA (in initial status)
Insulation resistance Note1)	Between [power supply terminals (+ and – terminals)] and [function earth terminal] 100 MΩ or more, 500 V DC, measured with megohmmeter (in initial status)
Vibration resistance	5 to 9 Hz amplitude 3.5 mm, 9 to 150 Hz acceleration 9.8 m/s^2, 10 sweeps each in X, Y and Z directions (1 octave/min)
Shock resistance	147 m/s^2, 3 times on 3 axes
EC Directive applicable	EMC Directive: EN61131-2
Noise immunity	1000 V [P-P] or more, Pulse width 50 ns, 1μs between power supply terminals (based on in-house measurements) Note2)
Protective construction	IP67 (Initial value, evaluated by us) Dustproof and waterproof from front panel only (packing used on panel contact surface) Note3)
Weight	Approx. 240 g

Note1) Not isolated between the USB port, COM. port and the internal digital circuit.
Note2) When using our exclusive cable.
Note3) When installing the unit again, replace the water-proof packing.

6.7.2 Performance Specifications (GT12)

Item		Specifications	
		GT12M	GT12G
Display	Display device	STN monochrome LCD	
	Resolution	320 (W) x 120 (H) dots	
	Displayable area	108.78 (W) x 40.78 (H) mm	
	Gradation	2 gradation/8 gradation (Selectable with GTWIN.)	
	Backlight	3-color LED backlight (white, pink, red)	3-color LED backlight (green, orange, red)
	Backlight brightness	Backlight brightness can be adjusted on the menu screen or GTWIN configuration settings. (There are some minor variations in the backlight brightness.)	
	Contrast	Contrast can be adjusted on the menu screen.	
Touch switches	Touch switch	Analog touch switch (resistive film type)	
	Touch switch operation	0.8 N or less	
	Life	1 million times or more (at 25 °C) Note1)	
Memory	F-ROM	Screen data (base, keyboard, login), Flow display data, FP monitor screen data: 2048 kbytes Recipe data: 64 k bytes Write device data: 64 kbytes	
	SRAM Note2)	Alarm history + Line graph sampling (27.5 kbytes) Logging data of Logging function (64 kbytes) Hold GT Device (2048 + 255 words) Hold PLC Device (24 words)	
Battery Note3)	Backup	Built-in clock data Alarm history data Line graph sampling data Logging data of Logging function Internal device hold data Hold PLC Device data	
	Life	Approx. 5 years (at 25 °C)	

Note1) The touch position may shift due to aging variation. If the touch position has shifted greatly, please adjust it.

Note2) A battery is necessary for SRAM backup.
The unused part of 27 kbytes for Alarm history and line graph sampling can be used for the logging function.

Note3) Please purchase a battery separately.
The battery life is the value when no power at all is supplied. The actual lifetime may be shorter according to the condition of use.

6.7.3 Function Specifications (GT12)

Item	Specifications
Displayable fonts	Fixed (GTWIN): 1/4 width (8 x 8), half width (16 x 8), full width (16 x 16) (Double, quadruple or octuple in height and width) True Type (GTWIN): 10 to 120 dots Windows (R): 10 to 120 dots
Character types	English, Japanese, Korean, German, French, Italian, Spanish, Simplified Chinese, Traditional Chinese characters and Turkish can be displayed.
Number of registerable screens	2 gradation:250 screens 8 gradation:200screens Note1)
Registerable screen number	Base screen: No. 0 to 3FF Keyboard screen: No. 0 to 7 Login screen: No. 0 to F
Graphics	Straight lines, continuous straight lines, squares, circles, ovals, arcs, elliptic arcs, fan shapes, elliptic fan shapes, beveled squares
Types of parts	Switch Function switch Lamp Message Data Bar graph Clock Note2) 3) Line graph Alarm list Keyboard Custom(message, lamp, switch)
Main functions Note4)	Recipe SD recipe Note5) Flow display Write device Multi language exchange Operation security GT link PLC multiple connection Data logging Note5) FP monitor
Through function	Connecting a computer to USB port and our PLC to COM port enables the communication between the PLC and the computer.
Copy function Note5)	Screen data can be copied with a SD memory card.
GTWIN ver.	Ver. 2.97 or later

Note1) Maximum allowable number varies depending on registered contents.
Note2) External clock data can be referred and displayed.
Note3) Accuracy of the GT internal clock is ±180 seconds per month.
Note4) It depends on the version of GT.
Note5) It is available for GT12M1 and GT12G1 only.

6.7.4 Interface Specifications (GT12)

Interface for connecting PLC/External devices
- COM port

Item		Specifications	
		AIG12*Q12D AIG12*Q13D	AIG12*Q14D AIG12*Q15D
		RS232C type	RS422/RS485 type
Communication standard		Conforms to RS232C (Non insulation type) Note1)	Conforms to RS422 (Non insulation type) Note1)
Communication condition with external devices	Baud rate (bit/s)	9600, 19200, 38400, 57600, 115200 bps	
	Data length (bit)	7, 8	
	Parity	None, Odd, Even	
	Stop bit (bit)	1	
Transmission distance (Total length)		Max. 15 m (Baud rate: 19200 bit/s)	Max. 500 m (Baud rate: 115200 bit/s)
Protocol		- MEWTOCOL (Protocol for PANASONIC PLC: FP series) - General-purpose serial (PANASONIC dedicated protocol) - Other companies' PLC protocols (For the details, refer to the latest GTWIN HELP.)	
Connector		Connector terminal base (8-pin) Note2) 3)	

Note1) It is internally isolated from the input power supply side (between +24V and 0V).
Note2) The (+) and (-) terminals are the power supply terminals for driving the main unit.
Note3) Regarding power supply voltage, please pay due consideration to the cable length so that the applied voltage is within the operation voltage range.

Interface for transferring screen data
- USB port

Item	Specifications
Communication standard	USB1.1
Connector shape Note1)	USB MiniB type 5pin (Male)
Trasmission distance	Max. 5 m
No. of connected unit with PC	1 unit

Note1) Take care of handling of the connector not to add an excessive static electricity on the metal part of the connector.

SD memory card slot (For GT12M1/GT12G1 only)

Item	Specifications
Support media	SD memory card , SDHC memory card Note1)
Supported format standard	Conforms to SD standard Note2)

Note1) The manufacturer name that the operation check has done: Panasonic Corporation
Usable capacity of a SD memory card varies according to the version of GT firmware.
Note2) Please format with a format software for SD memory cards.
Note3) The SD access lamp turns on while accessing the SD memory card.

6.8 GT21

6.8.1 General Specifications (GT21)

Item	Specifications
Rated voltage	24 V DC
Operating voltage range	21.6 to 26.4 V DC
Power consumption	4.8 W or less (200 mA or less)
Ambient temperature	0 to +50 °C Note1)
Ambient humidity	20 to 85% RH (at 25 °C), non-condensing
Storage temperature	-20 to +60 °C
Storage humidity	10 to 85% RH (at 25 °C), non-condensing
Breakdown voltage	Between [power supply terminals] and [case] 500 V AC for 1 minute, Cutoff current 10mA (at default setting)
Insulation resistance	Between [power supply terminals] and [case] 100 MΩ or more, 500 V DC, measured with megohmmeter (at default setting)
Vibration resistance	10 to 55 Hz (1-minute cycle) Amplitude: 0.75 mm, 10 min on 3 axes
Shock resistance	98 m/s^2 or more, 4 times on 3 axes
EC Directive applicable	EMC Directive: EN61000-6-2, EN61000-6-4
Noise immunity	1000 V [P-P] or more, Pulse width 50 ns, 1μs between power supply terminals (based on in-house measurements) Note2)
Protective construction	IP65 (Initial value, evaluated by us) Dustproof and drip-proof from front panel only (packing used on panel contact surface) Note3)
Weight	Approx. 230 g

Note1) When it is installed in a horizontal orientation (installed to make the liquid crystal face be topside) or when the FP programmer II or C-NET adapter is connected to the TOOL port, the usable range is 0 to +45 °C.

Note2) When using our exclusive cable.

Note3) When reattaching, replace waterproof packing.

6.8.2 Performance Specifications (GT21)

Item		Specifications
Display	Display device	256-color STN color LCD
	Resolution	320 (W) x 240 (H) dots
	Displayable area	98.0 (W) x 74.0 (H) mm
	Backlight	1-color LED backlight (white)
	Backlight brightness	Can be set on the menu screen or GTWIN configuration settings. (There are some minor variations in the backlight brightness.)
	Contrast	Can be adjusted on the menu screen or GTWIN configuration settings.
Touch switches	Touch switch	Analog touch switch (resistive film type)
	Touch switch operation	0.8 N or less
	Life	1 million times or more (at 25 °C) Note1)
Memory	F-ROM	Screen data (base, keyboard), Flow display data: 6656 kbytes Write device data: 64 kbytes
	SRAM Note2)	Alarm history + Line graph sampling (27.5 kbytes) Hold GT Device (2048 + 255 words) Hold PLC Device (24 words)
Battery Note3)	Backup	Built-in clock data Alarm history data Line graph sampling data Internal device hold data Hold PLC Device data
	Life	Approx. 2 years (at 25 °C)

Note1) The touch position may shift due to aging variation. If the touch position has shifted greatly, please adjust it.

Note2) A battery is necessary for SRAM backup.

Note3) Please purchase a battery separately.
The battery life is the value when no power at all is supplied. The actual lifetime may be shorter according to the condition of use.

6.8.3 Function Specifications (GT21)

Item	Specifications
Displayable fonts	Fixed (GTWIN): 1/4 width (8 x 8), half width (16 x 8), full width (16 x 16) (Double or quadruple in height and width) True Type (GTWIN): 10 to 240 dots Windows (R): 10 to 240 dots
Character types	English, Japanese, Korean, German, French, Italian, Spanish, Simplified Chinese, Traditional Chinese characters and Turkish can be displayed.
Number of registerable screens	250 screens Note1)
Registerable screen number	Base screen: No. 0 to 3FF Keyboard screen: No. 0 to 7
Graphics	Straight lines, continuous straight lines, squares, circles, ovals, arcs, elliptic arcs, fan shapes, elliptic fan shapes, beveled squares
Types of parts	Switch Function switch Lamp Message Data Bar graph Clock Note2) 3) Line graph Alarm list Alarm history Keyboard Custom(message, lamp, switch)
Main functions Note4)	Recipe Flow display Write device Multi language exchange
Through function	Connecting a computer to TOOL port and our PLC to COM port enables the communication between the PLC and the computer.
Copy function *5	The screen data can be copied by connecting the main units with a cable.
GTWIN ver.	Ver. 2.70 or later

Note1) Maximum allowable number varies depending on registered contents.
Note2) A clock part can be indicated by referring to external clock data.
Note3) Accuracy of the GT internal clock is ±180 seconds per month.
Note4) It depends on the version of GT.

6.8.4 Interface Specifications (GT21)

Interface for connecting PLC/External devices
- COM port

Item		Specifications	
		AIGT2230B/AIGT2230H	AIGT2232B/AIGT2232H
Communication standard		Conforms to RS232C (Non insulation type)	Conforms to RS422 (Non insulation type)
Communication condition with external devices	Baud rate (bit/s)	9600, 19200, 38400, 57600, 115200 bps	
	Data length (bit)	7, 8	
	Parity	None, Odd, Even	
	Stop bit (bit)	1	
Transmission distance (Total length)		Max. 15 m (Baud rate: 19200 bit/s)	Max. 500 m (Baud rate: 115200 bit/s)
Protocol		- MEWTOCOL (Protocol for PANASONIC PLC: FP series) - General-purpose serial (PANASONIC dedicated protocol) - Other companies' PLC protocols (For the details, refer to the latest GTWIN HELP.)	
Connector		Connector terminal base (8-pin) Note1) 2)	

Note1) The (+) and (-) terminals are the power supply terminals for driving the main unit.
Note2) Regarding power supply voltage, please pay due consideration to the cable length so that the applied voltage is within the operation voltage range.

Interface for transferring screen data
- TOOL port

Item		Specifications
Communication standard		Conforms to RS232C (Non insulation type)
Conditions for communications with GTWIN	Baud rate (bit/s)	9600, 19200, 115200, 230400 bps Note1) 2)
	Data length (bit)	8
	Parity	None, Odd, Even
	Stop bit (bit)	1
Protocol		GT dedicated protocol
Connector		Mini-DIN (5-pin)

Note1) The baud rate of 230400 bps is available when the USB/RS232C conversion cable is used.
Note2) When the baud rate is set to 230400 bps, the connection using the GTWIN automatic communication setting function is not possible. Set the GTWIN communication setting to 230400 bps, and then transfer data.

6.9 GT32

6.9.1 General Specifications (GT32)

Item	Specifications		
	GT32M	GT32T0	GT32T1
Rated voltage	24 V DC		
Operating voltage range	21.6 to 26.4 V DC		
Power consumption	10 W or less (410 mA or less)		12 W or less (500 mA or less)
Insulation method of power supply part	Transformer insulation		
Ambient temperature	0 to +50 °C Note1)		
Ambient humidity	20 to 85% RH (at 25 °C), non-condensing		
Storage temperature	-20 to +60 °C		
Storage humidity	10 to 85% RH (at 25 °C), non-condensing		
Breakdown voltage Note2)	Between [power supply terminals] and [case] 500 V AC for 1 minute, Cutoff current 10mA (at default setting)		
Insulation resistance Note2)	Between [power supply terminals] and [case] 100 MΩ or more, 500 V DC, measured with megohmmeter (at default setting)		
Vibration resistance	10 to 55 Hz (1-minute cycle), Amplitude: 0.75 mm, 10 min on 3 axes		
Shock resistance	98 m/s^2, 4 times on 3 axes		
EC Directive applicable	EN61131-2 (EMC Directive)		
Noise immunity	1000 V [P-P] or more, Pulse width 50 ns, 1μs between power supply terminals (based on in-house measurements) Note3)		
Protective construction	IP65 (Initial value, evaluated by us) Dustproof and drip-proof from front panel only (packing used on panel contact surface) Note4)		
Weight	Approx. 500 g	Approx. 470 g	Approx. 480 g

Note1) When it is installed in a horizontal orientation (installed to make the liquid crystal face be topside), the usable range is 0 to +40 °C.

Note2) Not isolated between the USB port, COM port, Ethernet port (GT32T1 only) and the internal digital circuit.

Note3) When using our exclusive cable.

Note4) When reattaching, replace waterproof packing.

6.9.2 Performance Specifications (GT32)

Item		Specifications		
		GT32M	GT32T0	GT32T1
Display	Display device	Blue-white STN monochrome LCD	4096-color TFT color LCD	
	Resolution	320 (W) x 240 (H) dots		
	Displayable area	113.2 (W) x 86.4 (H) mm	110.8 (W) x 83.6 (H) mm	
	Backlight	CFL backlight		
	LCD life	75000 hours (at 25 °C) Note4)	50000 hours (at 25 °C) Note4)	
	Contrast	Can be adjusted on the menu screen.	None	
Touch switches	Touch switch	Analog touch switch (resistive film type)		
	Touch switch operation	0.8 N or less		
	Life	1 million times or more (at 25 °C) Note1)		
Through function		Connecting a computer to Ethernet port or USB port and our PLC to COM port enables the communication between the PLC and the computer. Note6)		
Memory	F-ROM	Screen data (base, keyboard, login), Flow display data, FP monitor screen data: 2048 kbytes	Screen data (base, keyboard, login), Flow display data, Sound function, FP monitor screen data: 12288 kbytes Note5)	
		Recipe data: 64 k bytes Write device data: 64 kbytes		
	SRAM Note2)	Alarm history + Line graph sampling (27.5 kbytes) Logging data of Logging function (64 kbytes) Hold GT Device (2048 + 255 words) Hold PLC Device (24 words)		
Battery Note3)	Backup	Built-in clock data Alarm history data Line graph sampling data Logging data of Logging function Internal device hold data Hold PLC Device data		
	Life	Approx. 5 years (at 25 °C)	Approx. 3 years (at 25 °C)	

Note1) The touch position may shift due to aging variation. If the touch position has shifted greatly, please adjust it.

Note2) A battery is necessary for SRAM backup.
The unused part of 27 kbytes for Alarm history and line graph sampling can be used for the logging function.

Note3) Please purchase a battery separately.
The battery life is the value when no power at all is supplied. The actual lifetime may be shorter according to the condition of use.

Note4) The backlight life varies depending on the usage environment such as temperature, humidity or operating voltage.
Especially, if it is used at low temperatures, the life will be extremely short.

Note5) The sound output function is available for GT32T1 only.

Note6) An Ethernet port is available for GT32T1 only.

6.9.3 Function Specifications (GT32)

Item	Specifications	
	GT32M	GT32T0/GT32T1
Displayable fonts	Fixed (GTWIN): 1/4 width (8 x 8), half width (16 x 8), full width (16 x 16) (Double, quadruple or octuple in height and width) True Type (GTWIN): 10 to 240 dots Windows (R): 10 to 240 dots	
Character types	English, Japanese, Korean, German, French, Italian, Spanish, Simplified Chinese, Traditional Chinese characters and Turkish can be displayed.	
Number of registerable screens	Approx. 240 screens Note1)	Approx. 180 screens Note1)
Registerable screen number	Base screen: No. 0 to 3FF Keyboard screen: No. 0 to 7 Login screen: No. 0 to F	
Graphics	Straight lines, continuous straight lines, squares, circles, ovals, arcs, elliptic arcs, fan shapes, elliptic fan shapes, beveled squares	
Types of parts	Switch Function switch Lamp Message Data Bar graph Clock Note2) 3) Line graph Alarm list Keyboard Custom(message, lamp, switch)	
Main functions Note6)	Recipe SD recipe Flow display Write device Multi language exchange Sound output Note4) Operation security GT link PLC multiple connection Data logging FP monitor	
Through function	Connecting a computer to Ethernet port or USB port and our PLC to COM port enables the communication between the PLC and the computer. (This function is not available for PLCs manufactured by other companies.) Note5)	
Copy function	Screen data can be copied with a SD memory card.	
GTWIN ver.	Ver. 2.80 or later	

Note1) Maximum allowable number varies depending on registered contents.
Note2) External clock data can be referred and displayed.
Note3) Accuracy of the GT internal clock is ±180 seconds per month.
Note4) The sound output function is available for GT32T1 only.
Note5) An Ethernet port is available for GT32T1 only.
Note6) It depends on the version of GT.

6.9.4 Interface Specifications (GT32)

Interface for connecting PLC/External devices
- COM port

Item		Specifications	
		AIG32MQ02D/AIG32MQ03D AIG32TQ02D/AIG32TQ03D AIG32TQ12D/AIG32TQ13D	AIG32MQ04D/AIG32MQ05D AIG32TQ04D/AIG32TQ05D AIG32TQ14D/AIG32TQ15D
Communication standard		Conforms to RS232C (Non insulation type) Note1)	Conforms to RS422 (Non insulation type) Note1)
Communication condition with external devices	Baud rate (bit/s)	9600, 19200, 38400, 57600, 115200 bps	
	Data length (bit)	7, 8	
	Parity	None, Odd, Even	
	Stop bit (bit)	1	
Transmission distance (Total length)		Max. 15 m (Baud rate: 19200 bit/s)	Max. 500 m (Baud rate: 115200 bit/s)
Protocol		- MEWTOCOL (Protocol for PANASONIC PLC: FP series) - General-purpose serial (PANASONIC dedicated protocol) - Other companies' PLC protocols (For the details, refer to the latest GTWIN HELP.)	
Connector		Connector terminal base (8-pin) Note2) 3)	

Note1) It is internally isolated from the input power supply side (between +24V and 0V).
Note2) The (+) and (-) terminals are the power supply terminals for driving the main unit.
Note3) Regarding power supply voltage, please pay due consideration to the cable length so that the applied voltage is within the operation voltage range.

Interface for transferring screen data
- USB port

Item	Specifications
Communication standard	USB1.1
Connector shape Note1)	TYPE-B
Trasmission distance	Max. 5 m
No. of connected unit with PC	1 unit

Note1) Take care of handling of the connector not to add an excessive static electricity on the metal part of the connector.
Note2) Screens can be transferred in one third less time via the Ethernet port.
(The speed varies depending on screen contents.)

Ethernet port (GT32T1 only)

Item	Specifications
	GT32T1
Communication standard	IEEE802.8u/100BASE-TX IEEE802.3/10BASE-T Note1)
Connector shape	Plug-in phone jack Note2)
Transmission distance	Max. 100 m
Applicable cable	UTP cable (Unshielded wire) Category 5 Note3)
Auto MDI-X	Supported
SPEED lamp	Light on: During 100BASE-TX communication Blinking: During 10BASE-TX communication
LINK/ACT lamp	Light on: When linked Blinking: During data reception.

Note1) Data processing in the main unit is carried out with the serial communication of 115.2 kbps.
Note2) Take care of handling of the connector not to add an excessive static electricity on the metal part of the connector.
Note3) Do not use a STP cable (shielded wire).
Note4) Ethernet is a trademark of Zerox Corporation, USA.
Note5) Simultaneous communication with the USB port is not achievable.

SD memory card slot

Item	Specifications
Support media	SD memory card, SDHC memory card Note1)
Supported format standard	Conforms to SD standard Note2)

Note1) The manufacturer name that the operation check has done: Panasonic Corporation
Usable capacity of a SD memory card varies according to the version of GT firmware.
Note2) Please format with a format software for SD memory cards.
Note3) The SD access lamp turns on while accessing the SD memory card.

6.9.5 Sound Output Specifications (GT32T1 Only)

Item	Specifications
	GT32T1
File format	WAV format (PCM format, sampling 8 KHz, 16 bits monaural)
Max. sound data capacity	512 kbytes (Approx. 30 seconds)
Max. registered No. of sound data	128
Sound output voltage	2 Vp-p
Output terminal	ϕ3.5 stereo mini jack
Connecting amplifier	Input impedance 10 kΩ or more

6.10 GT32-E

6.10.1 General Specifications (GT32-E)

Item	Specifications	
	GT32M-E	GT32T-E
Rated voltage	24 V DC	
Operating voltage range	21.6 to 26.4 V DC	
Power consumption	4.8 W or less (200 mA or less)	7.2 W or less (300 mA or less)
Insulation method of power supply part	Transformer insulation	
Ambient temperature	-20 to +60 °C Note1)	
Ambient humidity	10 to 90% RH (at 25 °C), non-condensing	
Storage temperature	-20 to +60 °C	
Storage humidity	10 to 90% RH (at 25 °C), non-condensing	
Breakdown voltage Note2)	Between [power supply terminals] and [case] 500 V AC for 1 minute, Cutoff current 10mA (at default setting)	
Insulation resistance	Between [power supply terminals] and [case] 100 MΩ or more, 500 V DC, measured with megohmmeter (at default setting)	
Vibration resistance	5 to 8.4 Hz half amplitude 3.5 mm 8.4 to 150 Hz acceleration 9.8 m/s2, 10 sweeps each in X, Y and Z directions (1 octave/min)	
Shock resistance	147 m/s^2, 4 times on 3 axes	
EC Directive applicable	EN61131-2 (EMC Directive)	
Noise immunity	1000 V [P-P] or more, Pulse width 50 ns, 1μs between power supply terminals (based on in-house measurements) Note3)	
Electrostatic discharge resistance	6kV (Contact Discharge, EN61000-4-2 Level 3)	
Protective construction	IP67 (Initial value, evaluated by us) Dustproof and drip-proof from front panel only (packing used on panel contact surface) Note4)	
Weight	Approx. 470 g	

Note1) When it is installed in horizontal orientation (installed to make the liquid crystal face be topside), installed upright in vertical orientation or when using a battery, the usable range is -20 to +55 °C.
Note2) Not isolated between the USB port, COM port and the internal digital circuit.
Note3) When using our exclusive cable.
Note4) When reattaching, replace waterproof packing.

6.10.2 Performance Specifications (GT32-E)

Item		Specifications	
		GT32M-E	GT32T-E
Display Note1)	Display device	TFT monochrome LCD	TFT color LCD
	Resolution	320 (W) x 240 (H) dots	
	Displayable area	115.2 (W) x 86.4 (H) mm	
	Backlight	1-color LED backlight (white)	
	Contrast	Can be adjusted on the menu screen, GTWIN configuration settings or PLC. (There are some minor variations in the backlight brightness.)	
Touch switches	Touch switch	Analog touch switch (resistive film type)	
	Touch switch operation	0.8 N or less	
	Life	1 million times or more (at 25 °C) Note2)	
Memory	F-ROM	Screen data (base, keyboard, login), Flow display data, FP monitor screen data: 12288 kbytes Recipe data: 64 k bytes Write device data: 64 kbytes	
	SRAM Note3)	Alarm history + Line graph sampling (27.5 kbytes) Logging data of Logging function (64 kbytes) Hold GT Device (2048 + 255 words) Hold PLC Device (24 words)	
Battery Note4)	Backup	Built-in clock data Alarm history data Line graph sampling data Logging data of Logging function Internal device hold data Hold PLC Device data	
	Life	Approx. 3 years (at 25 °C)	

Note1) On the LCD panel, bright spots (points always lit) or black spots (points always unlit) may appear, or the uneven brightness, flickers or crosstalk (appearance of unintended shades in the area no graphic or part is arranged) may occur depending on the operating conditions. Note that these phenomena are resulted from the basic characteristics of LCD panel not defects or failures of the product.

Note2) The touch position may shift due to aging variation. If the touch position has shifted greatly, please adjust it.

Note3) A battery is necessary for SRAM backup.
The unused part of 27 kbytes for Alarm history and line graph sampling can be used for the logging function.

Note4) Please purchase a battery separately.
The battery life is the value when no power at all is supplied. The actual lifetime may be shorter according to the condition of use.

6.10.3 Function Specifications (GT32-E)

Item	Specifications	
	GT32M-E	GT32T-E
Displayable fonts	Fixed (GTWIN): 1/4 width (8 x 8), half width (16 x 8), full width (16 x 16) (Double, quadruple or octuple in height and width) True Type (GTWIN): 10 to 240 dots Windows (R): 10 to 240 dots	
Character types	English, Japanese, Korean, German, French, Italian, Spanish, Simplified Chinese, Traditional Chinese characters and Turkish can be displayed.	
Number of registerable screens	Approx. 180 screens Note1)	
Registerable screen number	Base screen: No. 0 to 3FF Keyboard screen: No. 0 to 7 Login screen: No. 0 to F	
Graphics	Straight lines, continuous straight lines, squares, circles, ovals, arcs, elliptic arcs, fan shapes, elliptic fan shapes, beveled squares	
Types of parts	Switch Function switch Lamp Message Data Bar graph Clock Note2) 3) Line graph Alarm list Keyboard Custom(message, lamp, switch)	
Main functions Note4)	Recipe SD recipe Flow display Write device Multi language exchange Operation security GT link PLC multiple connection Data logging FP monitor	
Through function	Connecting a computer to USB port and our PLC to COM port enables the communication between the PLC and the computer.	
Copy function	Screen data can be copied with a SD memory card.	
GTWIN ver.	Ver. 2.C0 or later	

Note1) Maximum allowable number varies depending on registered contents.
Note2) External clock data can be referred and displayed.
Note3) Accuracy of the GT internal clock is ±90 seconds per month (at 25 °C). Periodically set the clock to the right time for the system in which clock error is a problem.
Note4) It depends on the version of GT.

6.10.4 Interface Specifications (GT32-E)

Interface for connecting PLC/External devices
- COM port

Item		Specifications	
		AIG32MQ03DE AIG32TQ03DE	**AIG32MQ05DE AIG32TQ05DE**
Communication standard		Conforms to RS232C (Non insulation type) Note1)	Conforms to RS422 (Non insulation type) Note1)
Communication condition with external devices	Baud rate (bit/s)	9600, 19200, 38400, 57600, 115200 bps	
	Data length (bit)	7, 8	
	Parity	None, Odd, Even	
	Stop bit (bit)	1	
Transmission distance (Total length)		Max. 15 m (Baud rate: 19200 bit/s)	Max. 500 m (Baud rate: 115200 bit/s)
Protocol		- MEWTOCOL (Protocol for PANASONIC PLC: FP series) - General-purpose serial (PANASONIC dedicated protocol) - Other companies' PLC protocols (For the details, refer to the latest GTWIN HELP.)	
Connector		Connector terminal base (8-pin) Note2) 3)	

Note1) It is internally isolated from the input power supply side (between +24V and 0V).
Note2) The (+) and (-) terminals are the power supply terminals for driving the main unit.
Note3) Regarding power supply voltage, please pay due consideration to the cable length so that the applied voltage is within the operation voltage range.

Interface for transferring screen data
- USB port

Item	Specifications
Communication standard	USB1.1
Connector shape Note1)	TYPE-B
Trasmission distance	Max. 5 m
No. of connected unit with PC	1 unit

Note1) Take care of handling of the connector not to add an excessive static electricity on the metal part of the connector.

SD memory card slot

Item	Specifications
Support media Note1)	SD memory card, SDHC memory card (The manufacturer name that the operation check has done: Panasonic Corporation)
Supported format standard	Conforms to SD standard (Please format with a format software for SD memory cards.)

Note1) Check the usable temperature range of a SD memory card to be used before use.
.

Chapter 7

Dimensions and Other Documentation

7.1 Dimensions

7.1.1 GT01/GT01R

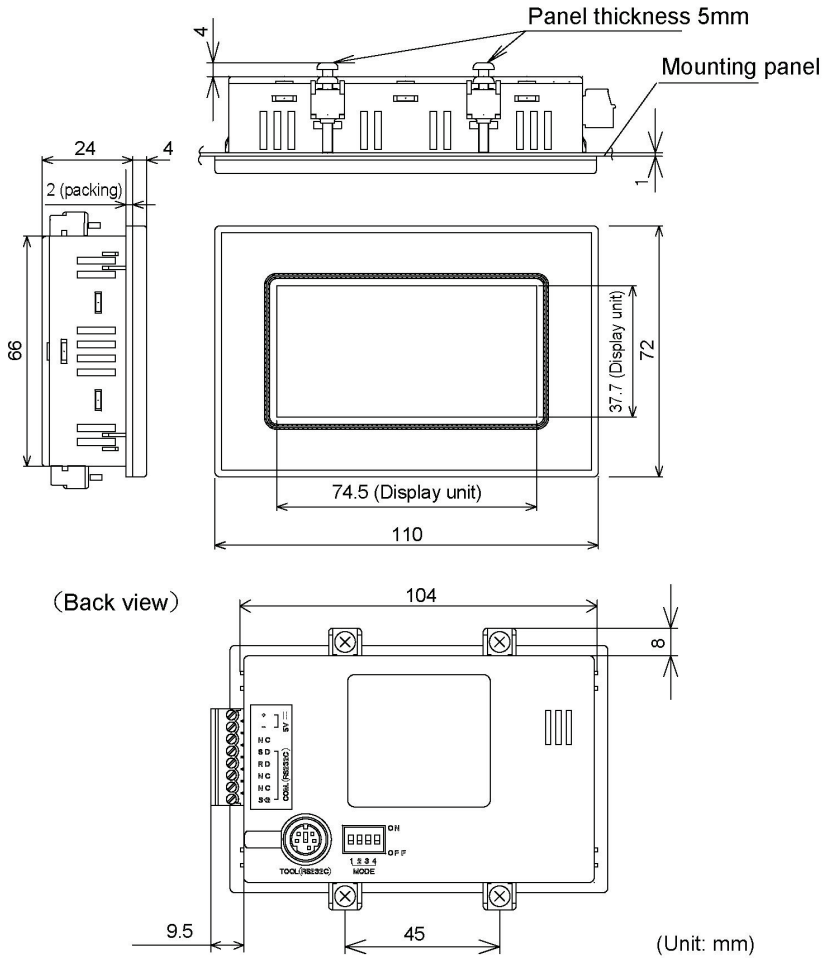

Installation dimensions

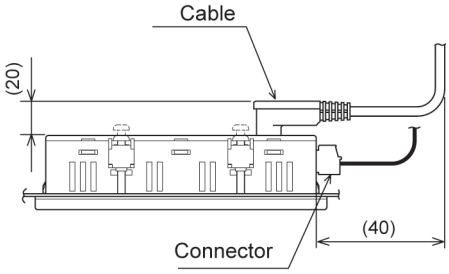

Panel cutout dimensions

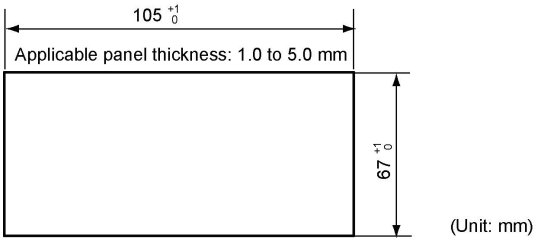

7.1.2 GT02

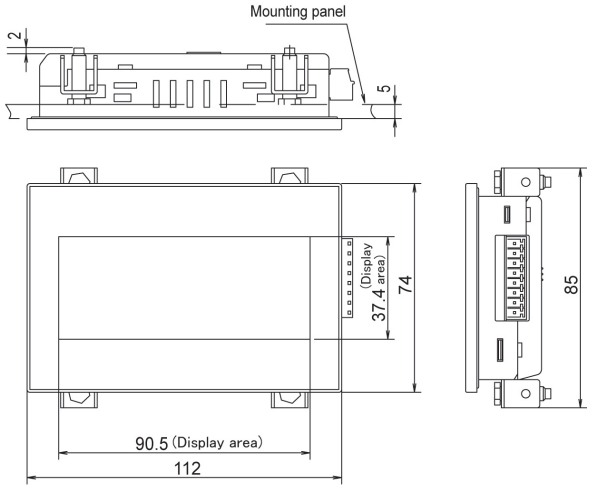

GT02M0
GT02M1
GT02G0
GT02G1

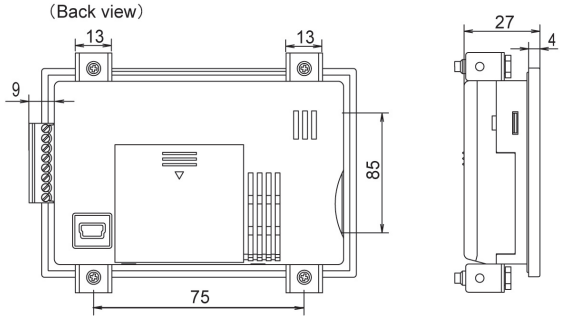

GT02M2
GT02G2

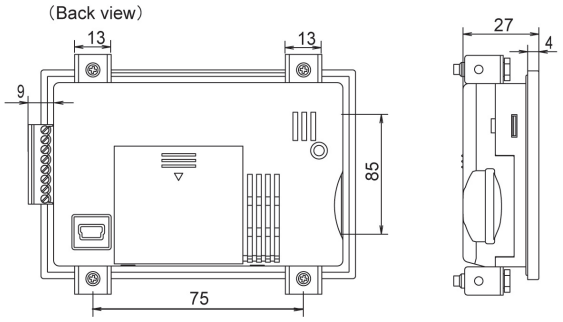

Installation dimensions

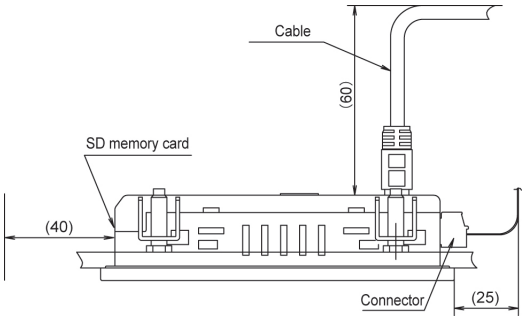

Panel cutout dimensions

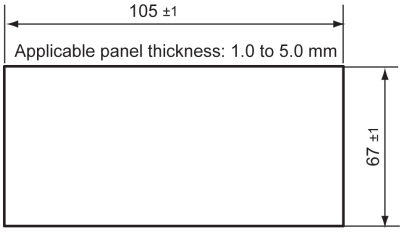

(Unit: mm)

7.1.3 GT02L

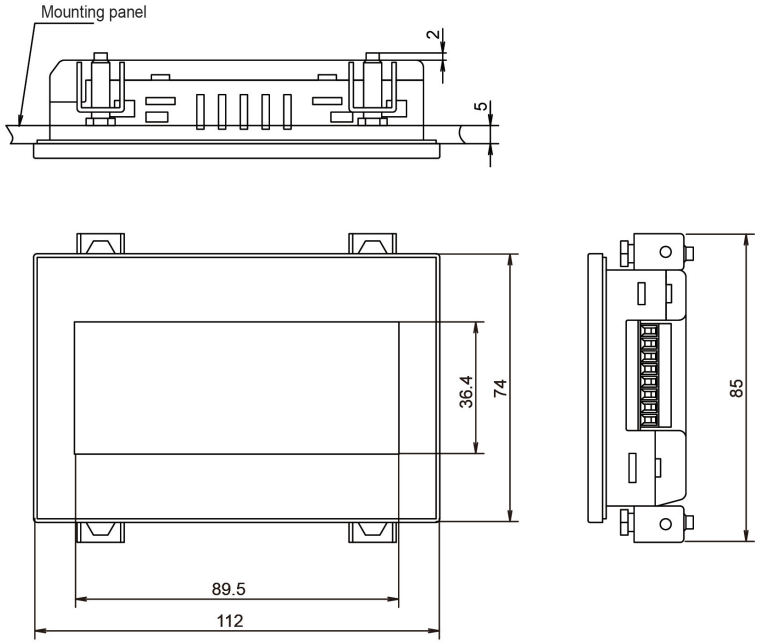

(Back view)

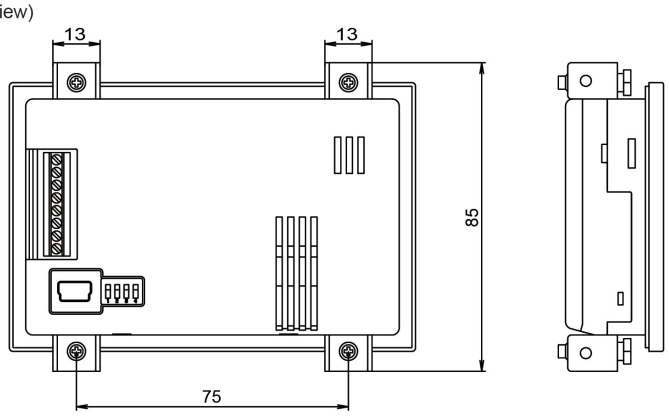

Installation dimensions

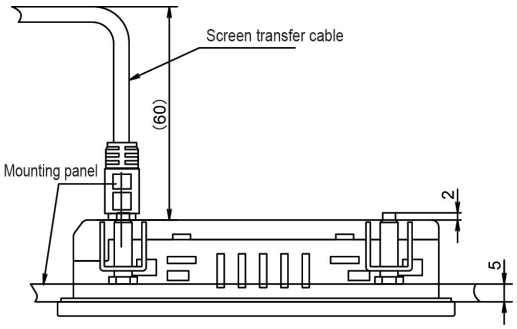

Panel cutout dimensions

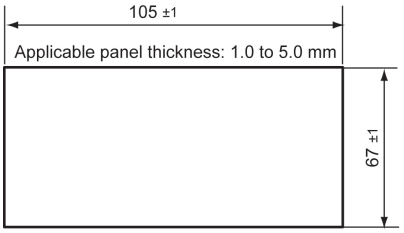

(Unit: mm)

7.1.4 GT03M-E

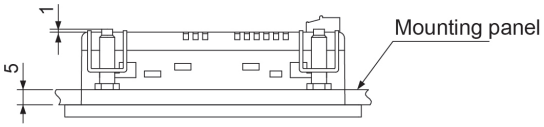

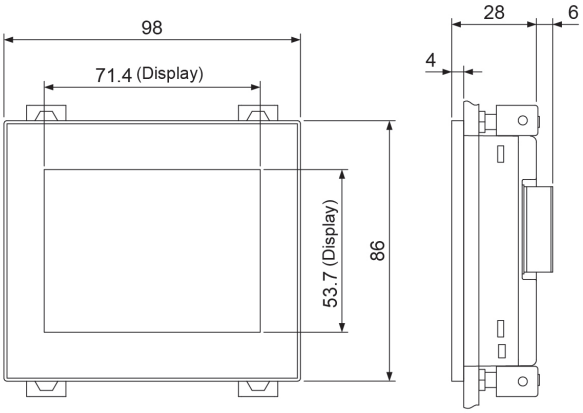

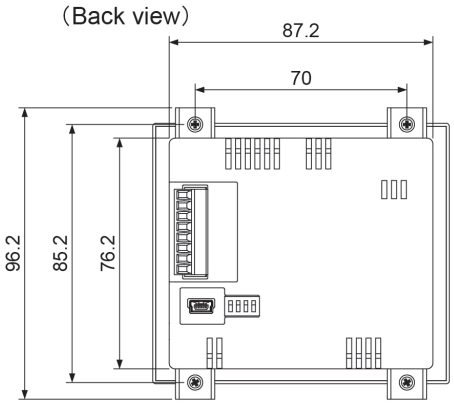

Installation dimensions

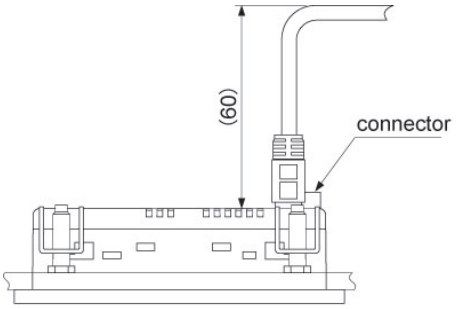

Panel cutout dimensions

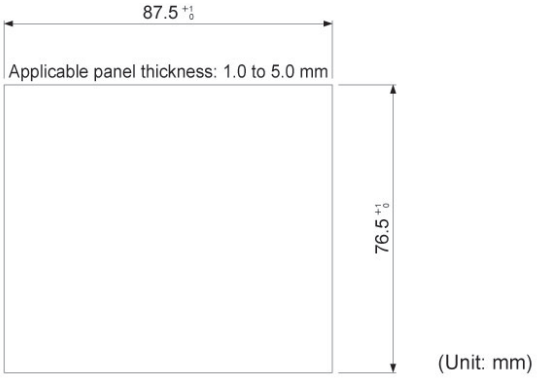

7.1.5 GT03T-E

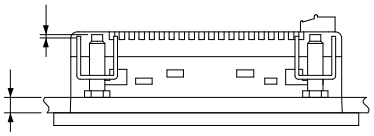

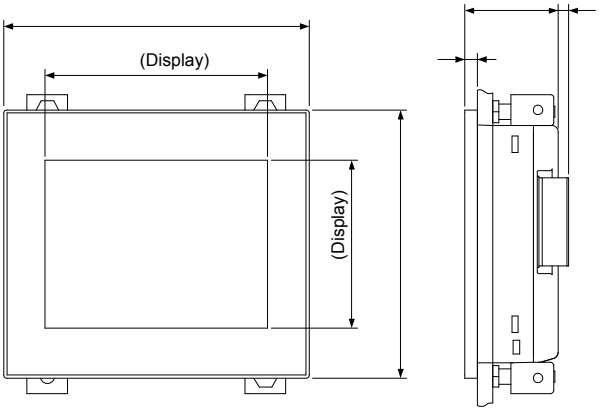

（Back view）

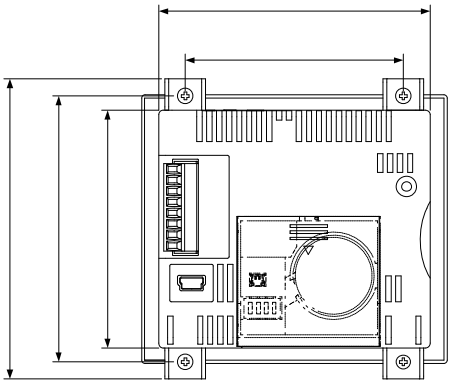

Installation dimensions

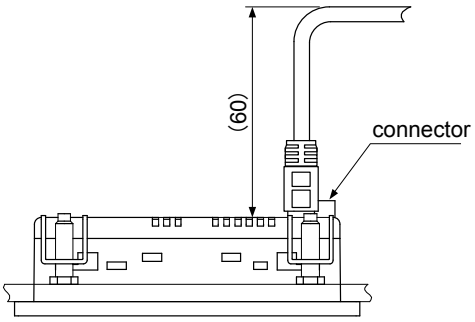

Panel cutout dimensions

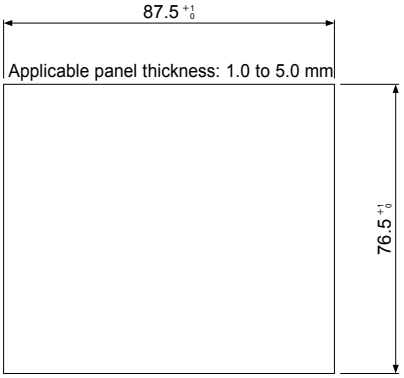

(Unit: mm)

7.1.6 GT05

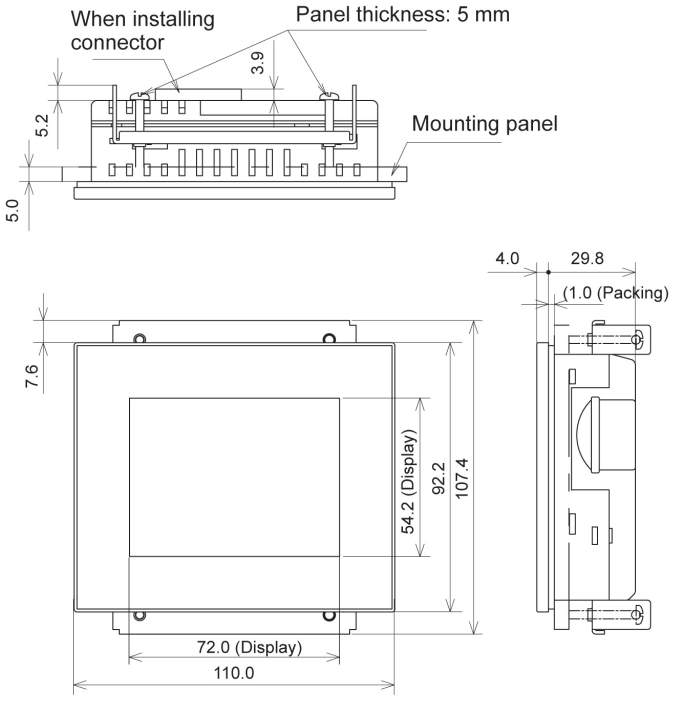

(Back view)

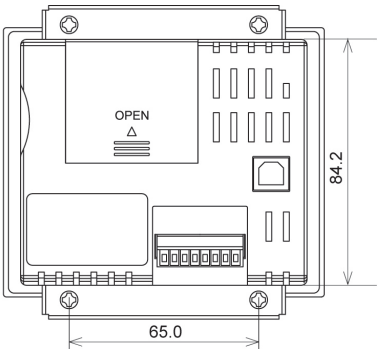

(Unit: mm)

Installation dimensions

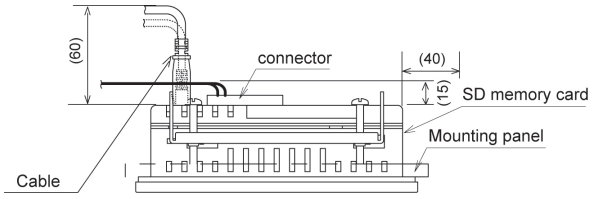

Panel cutout dimensions

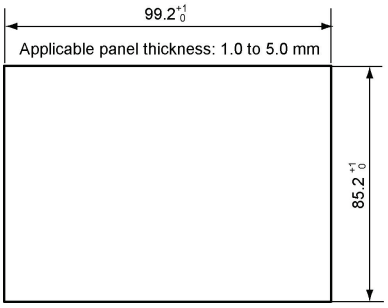

(Unit: mm)

7.1.7 GT11

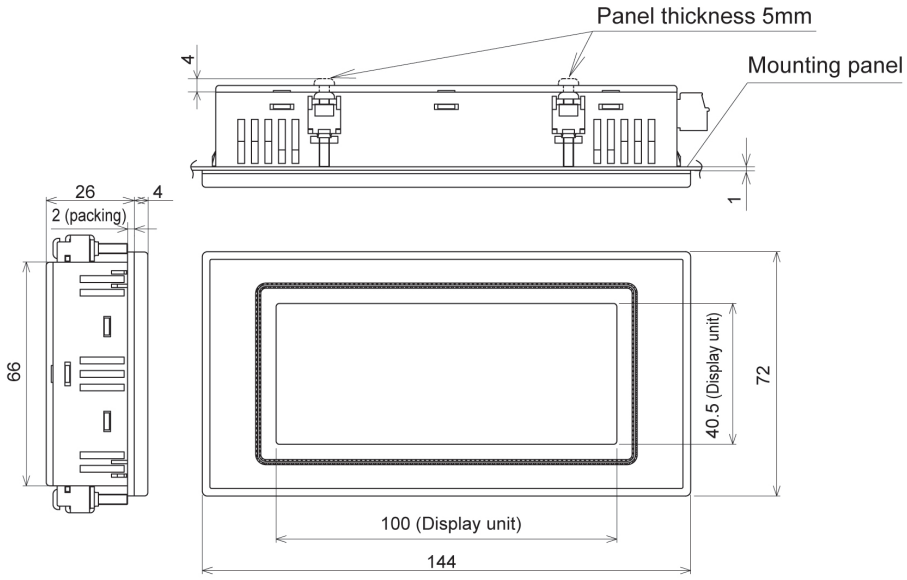

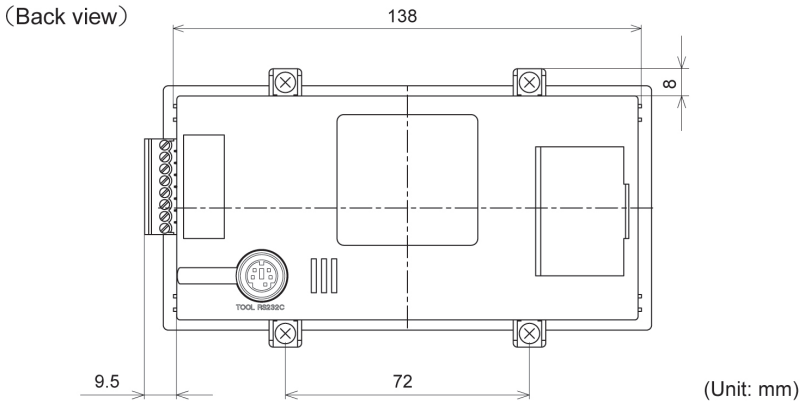

(Unit: mm)

Installation dimensions

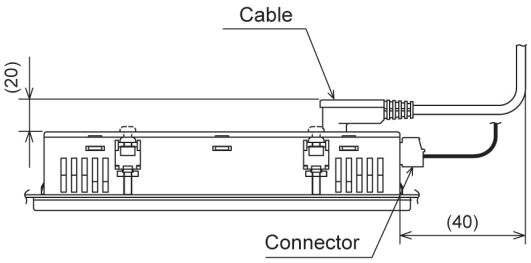

Panel cutout dimensions

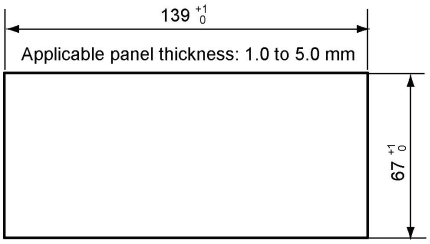

(Unit: mm)

7.1.8 GT12

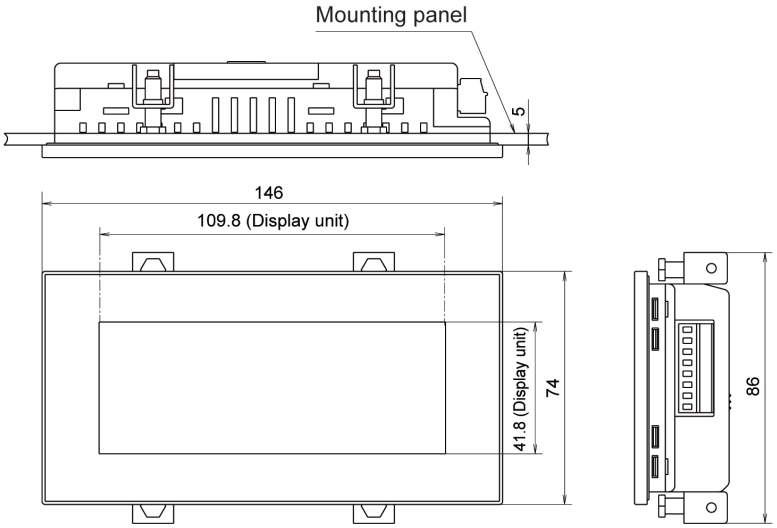

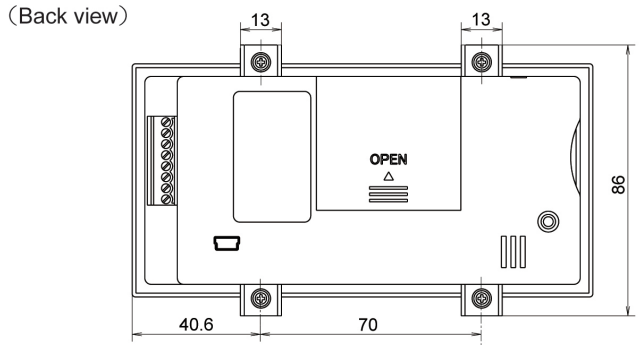

(Unit: mm)

Installation dimensions

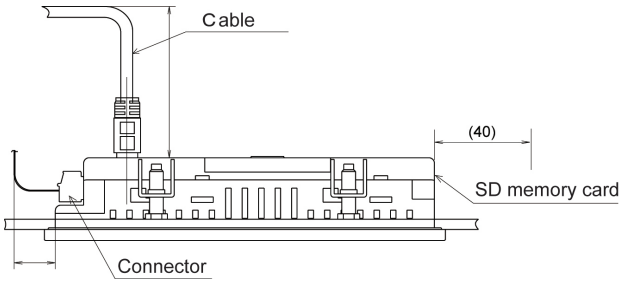

Panel cutout dimensions

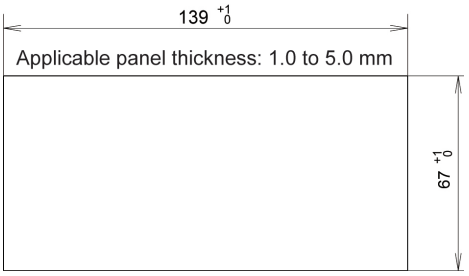

7.1.9 GT21

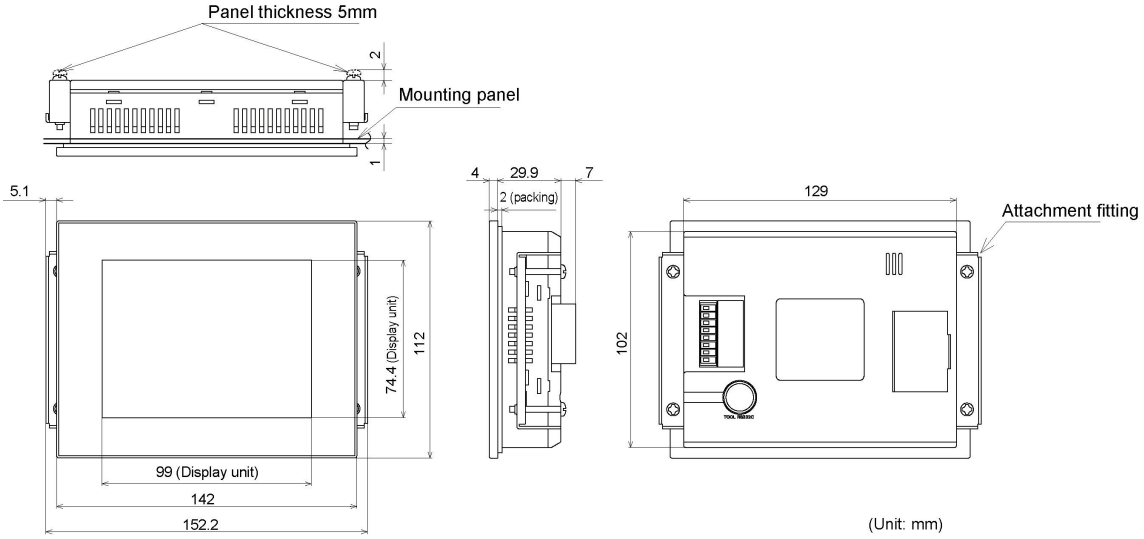

Installation dimensions

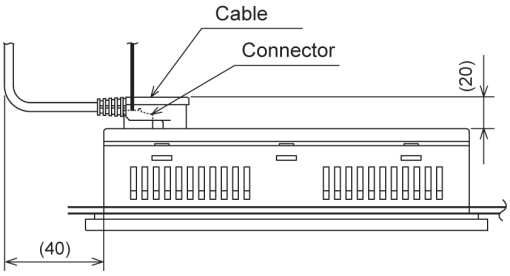

Panel cutout dimensions

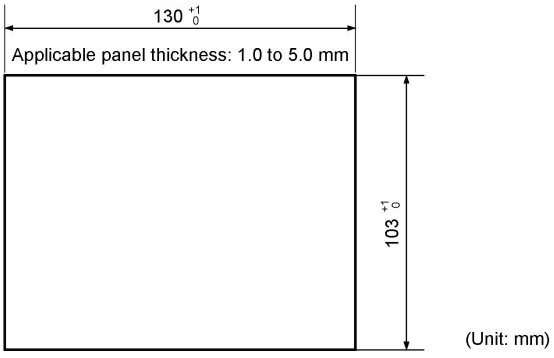

7.1.10 GT32

GT32M

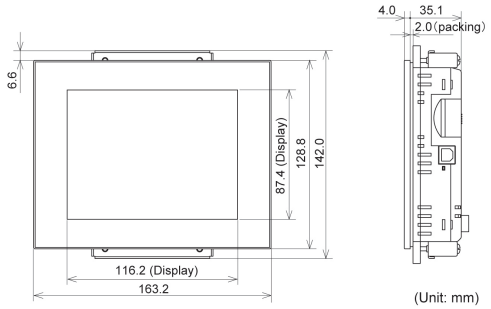

Back view

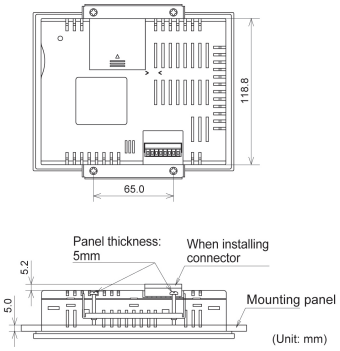

GT32T0

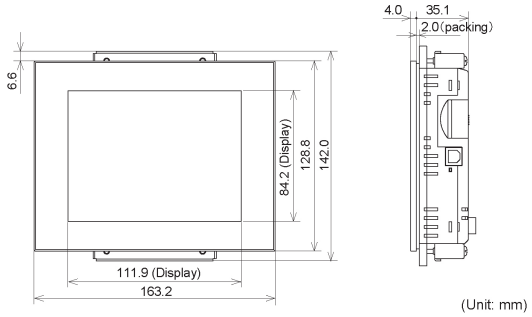

GT32T1

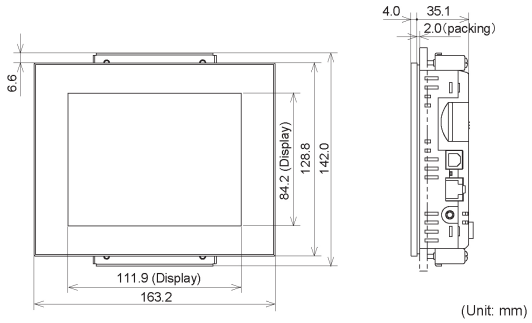

Installation dimensions

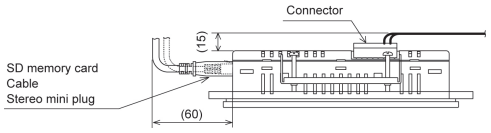

Panel cutout dimensions

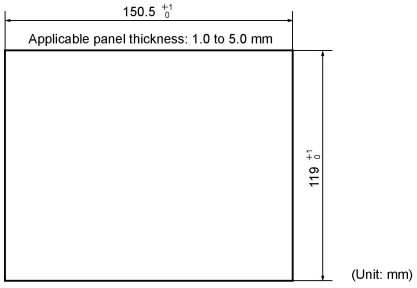

7.1.11 GT32-E

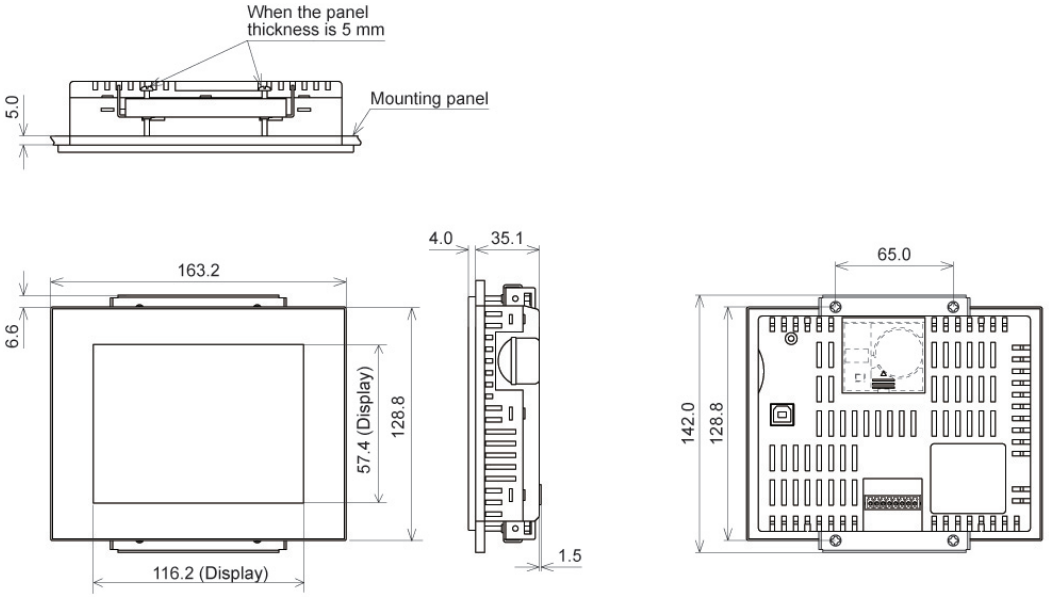

(Unit: mm)

Installation dimensions

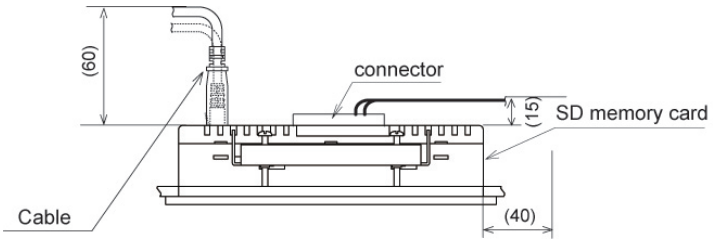

Panel cutout dimensions

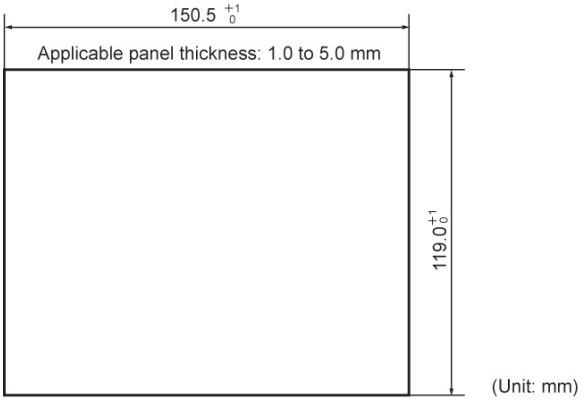

(Unit: mm)

7.2 Cable Specifications

7.2.1 AIGT8142

*Ferrite accessories

(Unit:mm)

Signals on mini-DIN plug side (PLC side)

Pin No.	Signal Name	Wire Color
1	SG	Brown
2	SD	Red
3	RD	Orange
4	—	—
5	+5V	White
—	SHELL	Black

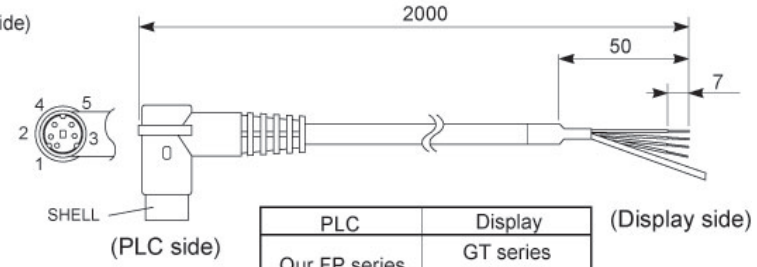

PLC	Display
Our FP series	GT series (5V DC RS232C)

7.2.2 AIGT8152

*Ferrite accessories

(Unit:mm)

Signals on mini-DIN plug side (PLC side)

Pin No.	Signal Name	Wire Color
1	-RD	Green
2	+RD	Yellow
3	SG	Brown
4	-SD	Orange
5	+5V	White
6	—	—
7	+SD	Red
8	—	—
—	SHELL	—

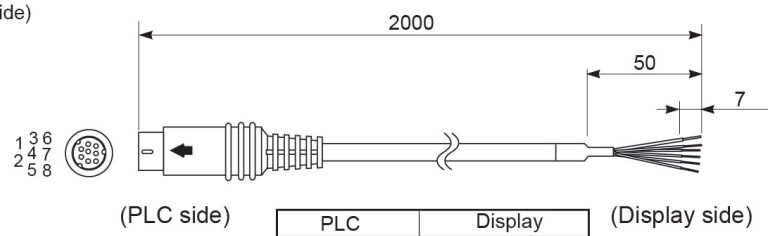

PLC	Display
Mitsubishi Electric-made FX series	GT series (5V DC RS232C RS422/RS485)

7.2.3 AIGT8162/AIGT8165/AIGT8160

Signals on mini-DIN plug side (PLC side)

(Unit:mm)

Pin No.	Signal Name	Wire Color
1	SG	Brown
2	SD	Red
3	RD	Orange
4	—	—
5	—	—
—	SHELL	Black

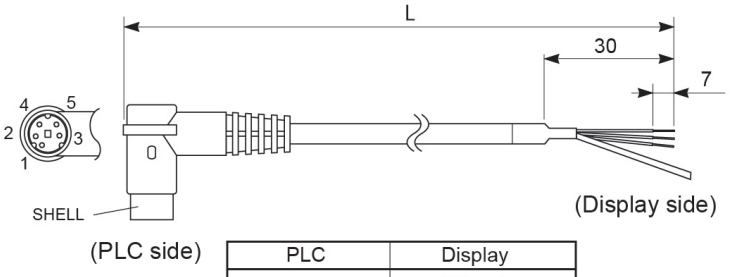

PLC	Display
Our FP series	GT series (24V DC RS232C)

Model	L
AIGT8162	2000 mm
AIGT8192 *	
AIGT8165	5000 mm
AIGT8160	10000 mm

*Unshielded variant of AIGT8162(for GT30)

7.2.4 AIGT8175

Signals on mini-DIN plug side (PLC side)

Pin No.	Signal Name	Wire Color
1	-RD	Green
2	+RD	Yellow
3	—	—
4	-SD	Orange
5	—	—
6	—	—
7	+SD	Red
8	—	—
—	SHELL	—

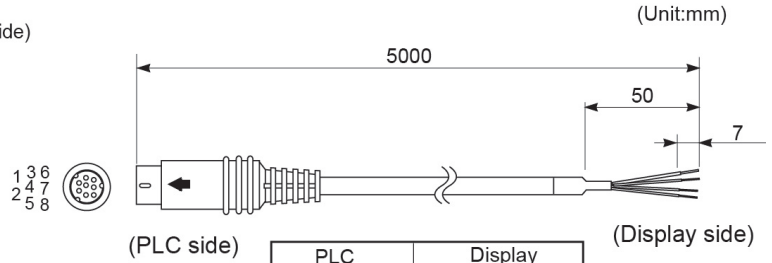

PLC	Display
Mitsubishi Electric-made FX series	GT series (24V DC RS422/RS485)

7.2.5 AIP81842

Signals on D-SUB side (PLC side)

Pin No.	Signal Name	Wire Color (dot mark)
1	FG	Brown (black dot)
2	SD	Brown (red dot)
3	RD	Yellow (black dot)
4	RS	Yellow (red dot)
5	CS	Green (black dot)
6	N.C.	—
7	SG	Green (red dot)
8	N.C.	—
9	ER	—

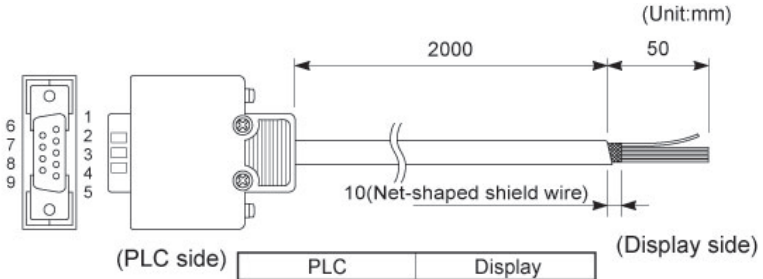

PLC	Display
Our FP2/FP2SH series	GT series (24V DC RS232C)

7.3 BIN/HEX/BCD Code Correspondence Table

Decimal	Hexadecimal	Binary		Binary Coded Decimal			
0	0000	00000000	00000000	0000	0000	0000	0000
1	0001	00000000	00000001	0000	0000	0000	0001
2	0002	00000000	00000010	0000	0000	0000	0010
3	0003	00000000	00000011	0000	0000	0000	0011
4	0004	00000000	00000100	0000	0000	0000	0100
5	0005	00000000	00000101	0000	0000	0000	0101
6	0006	00000000	00000110	0000	0000	0000	0110
7	0007	00000000	00000111	0000	0000	0000	0111
8	0008	00000000	00001000	0000	0000	0000	1000
9	0009	00000000	00001001	0000	0000	0000	1001
10	000A	00000000	00001010	0000	0000	0001	0000
11	000B	00000000	00001011	0000	0000	0001	0001
12	000C	00000000	00001100	0000	0000	0001	0010
13	000D	00000000	00001101	0000	0000	0001	0011
14	000E	00000000	00001110	0000	0000	0001	0100
15	000F	00000000	00001111	0000	0000	0001	0101
16	0010	00000000	00010000	0000	0000	0001	0110
17	0011	00000000	00010001	0000	0000	0001	0111
18	0012	00000000	00010010	0000	0000	0001	1000
19	0013	00000000	00010011	0000	0000	0001	1001
20	0014	00000000	00010100	0000	0000	0010	0000
21	0015	00000000	00010101	0000	0000	0010	0001
22	0016	00000000	00010110	0000	0000	0010	0010
23	0017	00000000	00010111	0000	0000	0010	0011
24	0018	00000000	00011000	0000	0000	0010	0100
25	0019	00000000	00011001	0000	0000	0010	0101
26	001A	00000000	00011010	0000	0000	0010	0110
27	001B	00000000	00011011	0000	0000	0010	0111
28	001C	00000000	00011100	0000	0000	0010	1000
29	001D	00000000	00011101	0000	0000	0010	1001
30	001E	00000000	00011110	0000	0000	0011	0000
31	001F	00000000	00011111	0000	0000	0011	0001
63	003F	00000000	00111111	0000	0000	0110	0011
255	00FF	00000000	11111111	0000	0010	0101	0101
9999	270F	00100111	00001111	1001	1001	1001	1001

7.4 ASCII Code Table

								b_7								
								b_6	0	0	0	0	1	1	1	1
								b_5	0	0	1	1	0	0	1	1
								b_4	0	1	0	1	0	1	0	1
b_7	b_6	b_5	b_4	b_3	b_2	b_1	b_0	R \ C	0	1	2	3	4	5	6	7
				0	0	0	0	0	NUL	DEL	SPACE	0	@	P	`	p
				0	0	0	1	1	SOH	DC_1	!	1	A	Q	a	q
				0	0	1	0	2	STX	DC_2	"	2	B	R	b	r
				0	0	1	1	3	ETX	DC_3	#	3	C	S	c	s
				0	1	0	0	4	EOT	DC_4	$	4	D	T	d	t
				0	1	0	1	5	ENQ	NAK	%	5	E	U	e	u
				0	1	1	0	6	ACK	SYN	&	6	F	V	f	v
				0	1	1	1	7	BEL	ETB	'	7	G	W	g	w
				1	0	0	0	8	BS	CAN	(	8	H	X	h	x
				1	0	0	1	9	HT	EM	)	9	I	Y	i	y
				1	0	1	0	A	LF	SUB	*	:	J	Z	j	z
				1	0	1	1	B	VT	ESC	+	;	K	[	k	{
				1	1	0	0	C	FF	FS	,	<	L	¥	l	|
				1	1	0	1	D	CR	GS	-	=	M	]	m	}
				1	1	1	0	E	SO	RS	.	>	N	^	n	~
				1	1	1	1	F	SI	US	/	?	O	_	o	DEL

Record of changes

Manual No.	Date	Desceiption of changes
ARCT1F511E	Jul.2010	First edition
ARCT1F511E-1	Dec.2010	Second edition
ARCT1F511E-2	Apr.2011	Third edition
ARCT1F511E-3	Aug.2011	Forth edition - Added new model GT32-E - Error correction
ARCT1F511E-4	Dec.2011	Fifth edition -Added vertical type display function (GT05/GT32/GT32-E) -Added device change function
ARCT1F511E-5	Jul.2013	Sixth edition - Added new models GT03-E (Monochrome and Color types)
ARCT1F511E-6	Nov.2013	Seventh edition

Please contact .....

Panasonic Industrial Devices SUNX Co., Ltd.

■ Overseas Sales Division (Head Office): 2431-1 Ushiyama-cho, Kasugai-shi, Aichi, 486-0901, Japan
■ Telephone: +81-568-33-7861 ■ Facsimile: +81-568-33-8591
panasonic.net/id/pidsx/global

About our sale network, please visit our website.

© Panasonic Industrial Devices SUNX Co., Ltd. 2013

November, 2013 PRINTED IN JAPAN

ARCT1F511E-6